Content

Part. 1 General information..... 2

Part. 2 Performances..... 5

Part. 3 Installations..... 104

Part. 4 Controller..... 130

Part. 1 General information

1. Product lineup 3

2. External Appearance 3

3. Nomenclature 4

1. Product lineup

Nominal ton	Model	Function	Air outlet	Power supply
6.25	MRC-062HWN1-R(C)	Heat pump	Side discharge	
7.5	MRC-075HWN1-R(C)	Heat pump	Side discharge	
8.5	MRC-085HWN1-R(C)	Heat pump	Side discharge	
10	MRC-100HWN1-R(C)	Heat pump	Side discharge	
12.5	MRC-125HWN1-R(C)	Heat pump	Side discharge	380-415V
15	MRC-150HWN1-R(C)	Heat pump	Side discharge	3Ph~ 50Hz
17.5	MRC-175HWN1-R(C)	Heat pump	Side discharge	
20	MRC-200HWN1-R(C)	Heat pump	Side discharge	
25	MRC-250HWN1-R(C)	Heat pump	Side discharge	
30	MRC-300HWN1-R(C)	Heat pump	Side discharge	

Notes: Please refer to specification tables for accurate cooling capacity with kW or Btu/h.

2. External Appearances



6.2&7.5ton



8.5&10ton



12.5&15ton



17.5&20ton



25&30ton

3. Nomenclatures

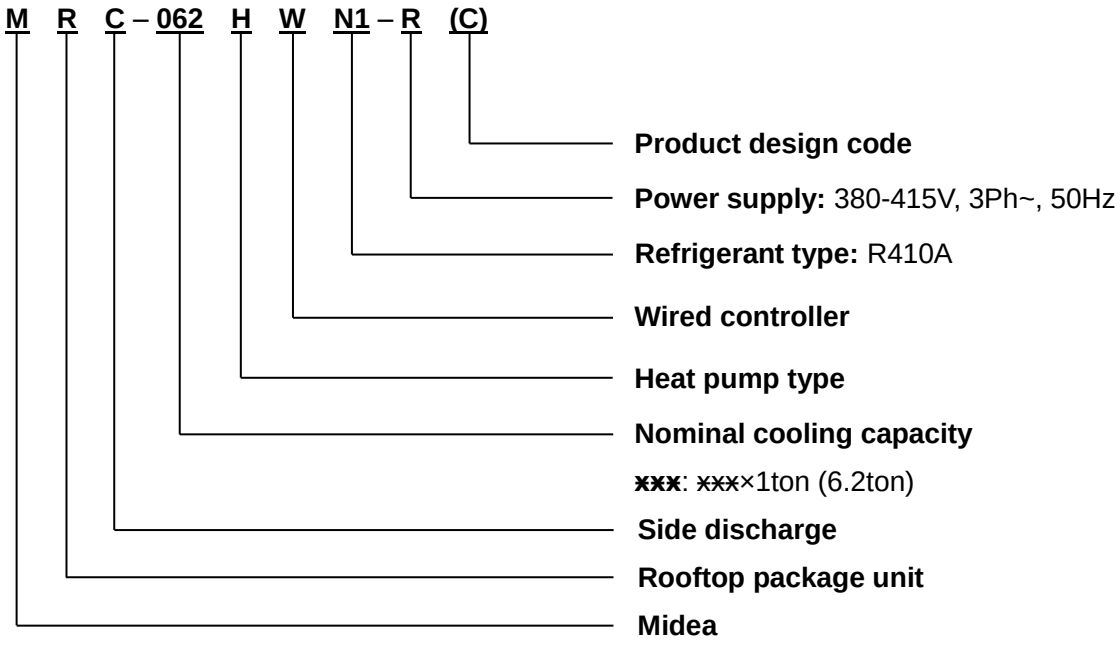

Part. 2 Performances

1. Features 6
2. Specifications 8
3. Dimensions drawings 26
4. Wiring diagrams..... 36
5. Performance data 43
6. Electrical data 73
7. Fan performance data 74
8. Refrigerant cycle diagram..... 95
9. Operation limits..... 96
10. Noise Criteria (NC) Curves 98
11. Accessories..... 103

1. Features

✧ Design flexibility.

Compact design and flanges of air flow inlet and outlet as standard. It is suitable for installation in rooftop and ground.

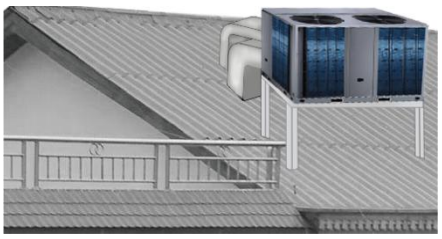



✧ Durable construction.

Pre-painted exterior cabinet panels pass 1000 hours salt spray test for durability. Weather-resistant construction with capped steams and sloped top panels design.

The rooftop package air conditioners with special anti-corrosion treatment are suitable for seaside areas or the areas exposed to acidic substances. (It should be customized.)





✧ Reliable scroll compressor.

Famous brand compressor, it is more reliable. No complex internal suction and discharge valves for quieter operation and higher reliability. Compact and light-weight design, fewer moving parts design.

✧ Adjustable pulley

Through changing the working pitch diameter of the pulley mounted on driver shaft, in turn the revolutions per minute of the driven shaft will increase or decrease to change air volume.

✧ Multi-protection design.

Multi-measurement can ensure units operate normally and reliably:

System current protection;

High/low-pressure switch protection;

Temperature sensor on/off protection, etc.

The three-phase protector can be customized.

✧ Easy to installation.

Removable access door on the electric box is standard. It is easy to move the cover of the electric box. Only connect the wires of power supply, and no need to connect any signal wires.

Reserved external drainage port, quickly and accurately connect the rubber drainage pipe.



✧ The unit provides external pressure gauge ports for convenient and fast checking system pressure without removing the panel.



✧ System self-diagnostic function.

Press the Check button in Main PCB board, and the LED display of PCB board in unit will display the normal checking code. If the unit is in running with abnormal operation, the LED display will show the error code.

✧ EHK (Electrical heater kits) and air intake filter as optional.

✧ Wired controller as standard. Besides Midea controller, other brand thermostat can be matched as optional solution.

✧ Centralized control function can be achieved through the centralized controller as optional.

MD-NIM01 should be connected between the rooftop package units and centralized controller.



2. Specifications

Nominal ton		**(Ton)**	**6.2**	**7.5**
Model			**MRC-062HWN1-R(C)**	**MRC-075HWN1-R(C)**
Power supply		\	380 - 415V, 3Ph~, 50Hz	380 - 415V, 3Ph~, 50Hz
Cooling	Cooling capacity	Btu/h	75,000	89,000
		kW	22.0	26.0
	Power input	kW	6.6	7.9
Heating	Heating capacity	Btu/h	89,000	103,000
		kW	26.0	30.0
	Power input	kW	7.5	8.9
Max. input consumption		kW	8.6	12.0
Max. current		A	18.3	24.8
Performance	Indoor air flow	CFM	2,800	2,830
	ESP	Pa	Default:80; 0 - 250	Default: 80; 0 - 250
	EER	Btu/h.W	11.4	11.3
	COP	Btu/h.W	11.9	11.6
Indoor coil	Number of rows	\	4	3
	Fin spacing	mm	1.3	1.3
	Fin type	\	Hydrophilic aluminum fin	Hydrophilic aluminum fin
	Tube diameter	mm	Φ7	Φ7
	Tube type	\	Inner grooved copper pipe	Inner grooved copper pipe
Indoor fan	Type / Quantity	\	Centrifugal / 1	Centrifugal / 1
	Drive type	\	Direct	Direct
	Motor quantity	\	1	1
	Motor model	\	YDK750-4E	YDK750-4E
	Motor capacitor	\	25μF/450V	25μF/450V
	Motor input	W	1,600/1,350/1,150	1,600/1,350/1,150
	Motor speed	RPM	1,090/985/895	1,090/985/895
Compressor	Type	\	Scroll / 1	Scroll / 1
	Model	\	ZP72KCE-TFD-52E	HCJ106
	Brand	\	Copeland	Danfoss
	Capacity	W	17,200	26,100
	Input	W	5,650	8,080
	RLA	A	12.5	14.3
	LRA	A	75	121.2
	Refrigerant oil	ml	1,774	2,460
Outdoor coil	Number of rows	\	2.5	3
	Fin spacing	mm	1.5	1.5
	Fin type	\	Hydrophilic aluminum fin	Hydrophilic aluminum fin
	Tube diameter	mm	Φ7	Φ7
	Tube type	\	Inner grooved copper pipe	Inner grooved copper pipe

Continued:

Nominal ton		**(Ton)**	**6.2**	**7.5**
Model			**MRC-062HN1-R(C)**	**MRC-075HN1-R(C)**
Outdoor fan	Type	\	Axial	Axial
	Quantity	\	1	1
	Drive type	\	Direct	Direct
	Motor quantity	\	1	1
	Motor model	\	YDK450-6C	YDK580-6C
	Motor capacitor	\	25μF/450V	25μF/450V
	Motor input	W	757/403	820/505
	Fan speed	RPM	840/550	870/640
Refrigerant	Type	\	R410A	R410A
	Volume	kg	5.0	4.8
	Control	\	Throttle valve	Throttle valve
Sound pressure level		dB(A)	71.0	72.1
Wired controller		\	KJR-25B	KJR-25B
Centralized controller (Optional)		\	No	No
Ambient temperature (Cooling)		°C	10 - 46	10 - 46
Ambient temperature (Heating)		°C	10 - 46	10 - 46
System stage		\	-9 - 24	-9 - 24
Dimensions	Net (W×H×D)	mm	1,475×840×1,130	1,475×840×1,130
	Packing (W×H×D)	mm	1,495×870×1,150	1,495×870×1,150
Weight	Net	kg	229	244
	Gross	kg	234	249

Notes:

1. Nominal ton only for reference. Cooling capacity as per specifications;

2. Cooling capacity test condition:

Outdoor ambient temperature: 35°C, indoor temperature: 26.7°CDB, 19.4°CWB;

Heating capacity test condition:

Outdoor ambient temperature: 7°CDB, 6°CWB, indoor temperature: 20°C;

3. Units are suitable for operation to ±20% of nominal indoor air flow.

4. ESP: external static pressure;

5. Sound pressure level values are measured in a semi-anechoic room, at a position 1 meter in front of the unit and (1 meter + Height of the unit) / 2 above the floor;

6. Specifications are subject to change without prior notice for product improvement.

Nominal ton		**(Ton)**	**8.5**	
Model			**MRC-085HWN1-R(C)**	
Power Supply		\	380 - 415V, 3Ph~, 50Hz	
Cooling	Cooling capacity	Btu/h	103,000	
		kW	30.0	
	Power input	kW	9.3	
Heating	Heating capacity	Btu/h	120,000	
		kW	35.0	
	Power input	kW	10.6	
Max. input consumption		kW	13.6	
Max. current		A	26.5	
Performance	Indoor air flow	CFM	3,500	
	ESP	Pa	Default: 80; 0 - 200	
	EER	Btu/h.W	11.1	
	COP	Btu/h.W	11.3	
Indoor coil	Number of rows	\	4	
	Fin spacing	mm	1.5	
	Fin type	\	Hydrophilic aluminum fin	
	Tube diameter	mm	Φ7	
	Tube type	\	Inner grooved copper pipe	
Indoor fan	Type / Quantity	\	Centrifugal / 1	
	Drive type	\	Belt	
	Motor quantity	\	1	
	Motor model	\	YE2-90L-4-1.5KW	
	Motor capacitor	\	\	
	Motor input	W	\	
	Motor speed	RPM	1,400	
Compressor	Type / Quantity	\	Scroll / 2	
	Model	\	E604DH-59D2G	E604DH-59D2G
	Brand	\	Hitachi	Hitachi
	Capacity	W	15,390	15,390
	Input	W	5,130	5,130
	RLA	A	8.8	8.8
	LRA	A	62	62
	Refrigerant oil	ml	1,300	1,300
Outdoor coil	Number of rows	\	2.5	
	Fin spacing	mm	1.5	
	Fin type	\	Hydrophilic aluminum fin	
	Tube diameter	mm	Φ7	
	Tube type	\	Inner grooved copper pipe	

Continued:

Nominal ton		**(Ton)**	**8.5**
Model			**MRC-085HWN1-R(C)**
Outdoor fan	Type	\	Axial
	Quantity	\	1
	Drive type	\	Direct
	Motor quantity	\	1
	Motor model	\	YDK580-6C
	Motor capacitor	\	25μF/450V
	Motor input	W	820/505
	Fan speed	RPM	870/640
Refrigerant	Type	\	R410A
	Volume	kg	2.5+2.5
	Control	\	Throttle valve
Sound pressure level		dB(A)	71.5
Wired controller		\	KJR-12B/dP(T)-E(B)
Centralized controller (Optional)		\	Yes
Ambient temperature (Cooling)		°C	10 - 46
Ambient temperature (Heating)		°C	-9 - 24
System stage		\	2
Dimensions	Net (W×H×D)	mm	1,483×1,231×1,138
	Packing (W×H×D)	mm	1,500×1,255×1,155
Weight	Net	kg	340
	Gross	kg	350

Notes:

1. Nominal ton only for reference. Cooling capacity as per specifications;

2. Cooling capacity test condition:

Outdoor ambient temperature: 35°C, indoor temperature: 26.7°CDB, 19.4°CWB;

Heating capacity test condition:

Outdoor ambient temperature: 7°CDB, 6°CWB, indoor temperature: 20°C;

3. Units are suitable for operation to ±20% of nominal indoor air flow.

4. ESP: external static pressure;

5. Sound pressure level values are measured in a semi-anechoic room, at a position 1 meter in front of the unit and (1 meter + Height of the unit) / 2 above the floor;

6. Specifications are subject to change without prior notice for product improvement.

Nominal ton		**(Ton)**	**10**	
Model			**MRC-100HWN1-R(C)**	
Power supply		\	380 - 415V, 3Ph~, 50Hz	
Cooling	Cooling capacity	Btu/h	120,000	
		kW	35.0	
	Power input	kW	10.7	
Heating	Heating capacity	Btu/h	137,000	
		kW	40.0	
	Power input	kW	11.9	
Max. input consumption		kW	16.0	
Max. current		A	28.8	
Performance	Indoor air flow	CFM	4,100	
	ESP	Pa	Default: 90; 0 - 250	
	EER	Btu/h.W	11.2	
	COP	Btu/h.W	11.5	
Indoor coil	Number of rows	\	4	
	Fin spacing	mm	1.5	
	Fin type	\	Hydrophilic aluminum fin	
	Tube diameter	mm	Φ7	
	Tube type	\	Inner grooved copper pipe	
Indoor fan	Type / Quantity	\	Centrifugal / 1	
	Drive type	\	Belt	
	Motor quantity	\	1	
	Motor model	\	YE2-90L-4-1.5KW	
	Motor capacitor	\	\	
	Motor input	W	\	
	Motor speed	RPM	1,400	
Compressor	Type / Quantity	\	Scroll / 2	
	Model	\	E654DH-65D2G	E654DH-65D2G
	Brand	\	Hitachi	Hitachi
	Capacity	W	17,100	17,100
	Input	W	5,700	5,700
	RLA	A	9.6	9.6
	LRA	A	66	66
	Refrigerant oil	ml	1,300	1,300
Outdoor coil	Number of rows	\	2.5	
	Fin spacing	mm	1.5	
	Fin type	\	Hydrophilic aluminum fin	
	Tube diameter	mm	Φ7	
	Tube type	\	Inner grooved copper pipe	

Continued:

Nominal ton		**(Ton)**	**10**
Model			**MRC-100HWN1-R(C)**
Outdoor fan	Type	\	Axial
	Quantity	\	1
	Drive type	\	Direct
	Motor quantity	\	1
	Motor model	\	YS1100-6P
	Motor capacitor	\	\
	Motor input	W	\
	Fan speed	RPM	1,120/965
Refrigerant	Type	\	R410A
	Volume	kg	2.9+2.9
	Control	\	Throttle valve
Sound pressure level		dB(A)	71.5
Wired controller		\	KJR-12B/dP(T)-E(B)
Centralized controller (Optional)		\	Yes
Ambient temperature (Cooling)		°C	10 - 46
Ambient temperature (Heating)		°C	-9 - 24
System stage		\	2
Dimensions	Net (W×H×D)	mm	1,483×1,231×1,138
	Packing (W×H×D)	mm	1,500×1,255×1,155
Weight	Net	kg	343
	Gross	kg	354

Notes:

1. Nominal ton only for reference. Cooling capacity as per specifications;

2. Cooling capacity test condition:

Outdoor ambient temperature: 35°C, indoor temperature: 26.7°CDB, 19.4°CWB;

Heating capacity test condition:

Outdoor ambient temperature: 7°CDB, 6°CWB, indoor temperature: 20°C;

3. Units are suitable for operation to ±20% of nominal indoor air flow.

4. ESP: external static pressure;

5. Sound pressure level values are measured in a semi-anechoic room, at a position 1 meter in front of the unit and (1 meter + Height of the unit) / 2 above the floor;

6. Specifications are subject to change without prior notice for product improvement.

Nominal ton		**(Ton)**	**12.5**	
Model			**MRC-125HWN1-R(C)**	
Power supply		\	380 - 415V, 3Ph~, 50Hz	
Cooling	Cooling capacity	Btu/h	150,000	
		kW	44.0	
	Power input	kW	13.3	
Heating	Heating capacity	Btu/h	154,000	
		kW	45.0	
	Power input	kW	13.2	
Max. input consumption		kW	19.7	
Max. current		A	38.2	
Performance	Indoor air flow	CFM	5,500	
	ESP	Pa	Default: 110; 0 - 275	
	EER	Btu/h.W	11.3	
	COP	Btu/h.W	11.7	
Indoor coil	Number of rows	\	4+4	
	Fin spacing	mm	1.3+1.3	
	Fin type	\	Hydrophilic aluminum fin	
	Tube diameter	mm	Φ7+Φ7	
	Tube type	\	Inner grooved copper pipe	
Indoor fan	Type / Quantity	\	Centrifugal / 1	
	Drive type	\	Belt	
	Motor quantity	\	1	
	Motor model	\	YE2-100L2-4-3KW	
	Motor capacitor	\	\	
	Motor input	W	\	
	Motor speed	RPM	1,420	
Compressor	Type / Quantity	\	Scroll / 2	
	Model	\	ZP61KCE-TFD-522	ZP122KCE-TFD-522
	Brand	\	Copeland	Copeland
	Capacity	W	14,700	29,900
	Input	W	4,750	9,190
	RLA	A	10.9	18
	LRA	A	64	127
	Refrigerant oil	ml	1,685	2,513
Outdoor coil	Number of rows	\	3	
	Fin spacing	mm	1.5	
	Fin type	\	Hydrophilic aluminum fin	
	Tube diameter	mm	Φ7	
	Tube type	\	Inner grooved copper pipe	

Continued:

Nominal ton		**(Ton)**	**12.5**
Model			**MRC-125HWN1-R(C)**
Outdoor fan	Type	\	Axial
	Quantity	\	1
	Drive type	\	Direct
	Motor quantity	\	1
	Motor model	\	YS1100-6
	Motor capacitor	\	\
	Motor input	W	1,120/965
	Fan speed	RPM	\
Refrigerant	Type	\	R410A
	Volume	kg	3.4+2.1
	Control	\	Throttle valve
Sound pressure level		dB(A)	71.8
Wired controller		\	KJR-12B/dP(T)-E(B)
Centralized controller (Optional)		\	Yes
Ambient temperature (Cooling)		°C	10 - 46
Ambient temperature (Heating)		°C	-9 - 24
System stage		\	2
Dimensions	Net (W×H×D)	mm	1,965×1,230×1,130
	Packing (W×H×D)	mm	1,995×1,255×1,160
Weight	Net	kg	451
	Gross	kg	471

Notes:

1. Nominal ton only for reference. Cooling capacity as per specifications;

2. Cooling capacity test condition:

Outdoor ambient temperature: 35°C, indoor temperature: 26.7°CDB, 19.4°CWB;

Heating capacity test condition:

Outdoor ambient temperature: 7°CDB, 6°CWB, indoor temperature: 20°C;

3. Units are suitable for operation to ±20% of nominal indoor air flow.

4. ESP: external static pressure;

5. Sound pressure level values are measured in a semi-anechoic room, at a position 1 meter in front of the unit and (1 meter + Height of the unit) / 2 above the floor;

6. Specifications are subject to change without prior notice for product improvement.

Nominal ton		**(Ton)**	**15**	
Model			**MRC-150HWN1-R(C)**	
Power supply		\	380 - 415V, 3Ph~, 50Hz	
Cooling	Cooling capacity	Btu/h	180,000	
		kW	53.0	
	Power input	kW	16.7	
Heating	Heating capacity	Btu/h	191,000	
		kW	56.0	
	Power input	kW	17.2	
Max. input consumption		kW	25.0	
Max. current		A	46.1	
Performance	Indoor air flow	CFM	7,000	
	ESP	Pa	Default: 110; 0 - 325	
	EER	Btu/h.W	10.8	
	COP	Btu/h.W	11.1	
Indoor coil	Number of rows	\	4+4	
	Fin spacing	mm	1.3+1.3	
	Fin type	\	Hydrophilic aluminum fin	
	Tube diameter	mm	Φ7+Φ7	
	Tube type	\	Inner grooved copper pipe	
Indoor fan	Type / Quantity	\	Centrifugal / 1	
	Drive type	\	Belt	
	Motor quantity	\	1	
	Motor model	\	YE2-112M-4-4KW	
	Motor capacitor	\	\	
	Motor input	W	\	
	Motor speed	RPM	1,440	
Compressor	Type / Quantity	\	Scroll / 2	
	Model	\	ZP61KCE-TFD-522	ZP144KCE-TFD-522
	Brand	\	Copeland	Copeland
	Capacity	W	14,700	35,400
	Input	W	4,750	10,800
	RLA	A	10.9	21.1
	LRA	A	64	144
	Refrigerant oil	ml	1,685	3,253
Outdoor coil	Number of rows	\	3.5	
	Fin spacing	mm	1.6	
	Fin type	\	Hydrophilic aluminum fin	
	Tube diameter	mm	Φ8	
	Tube type	\	Inner grooved copper pipe	

Nominal ton		**(Ton)**	**15**
Model			**MRC-150HWN1-R(C)**
Outdoor fan	Type	\	Axial
	Quantity	\	1
	Drive type	\	Direct
	Motor quantity	\	1
	Motor model	\	YS1100-6
	Motor capacitor	\	\
	Motor input	W	\
	Fan speed	RPM	1,120/965
Refrigerant	Type	\	R410A
	Volume	kg	6.1+3.0
	Control	\	Throttle valve
Sound pressure level		dB(A)	76.9
Wired controller		\	KJR-12B/dP(T)-E(B)
Centralized controller (Optional)		\	Yes
Ambient temperature (Cooling)		°C	10 - 46
Ambient temperature (Heating)		°C	-9 - 24
System stage		\	2
Dimensions	Net (W×H×D)	mm	1,965×1,230×1,130
	Packing (W×H×D)	mm	1,995×1,255×1,160
Weight	Net	kg	492
	Gross	kg	512

Notes:

1. Nominal ton only for reference. Cooling capacity as per specifications;

2. Cooling capacity test condition:

Outdoor ambient temperature: 35°C, indoor temperature: 26.7°CDB, 19.4°CWB;

Heating capacity test condition:

Outdoor ambient temperature: 7°CDB, 6°CWB, indoor temperature: 20°C;

3. Units are suitable for operation to ±20% of nominal indoor air flow.

4. ESP: external static pressure;

5. Sound pressure level values are measured in a semi-anechoic room, at a position 1 meter in front of the unit and (1 meter + Height of the unit) / 2 above the floor;

6. Specifications are subject to change without prior notice for product improvement.

Nominal ton		**(Ton)**	**17.5**	
Model			**MRC-175HWN1-R(C)**	
Power supply		\	380 - 415V, 3Ph~, 50Hz	
Cooling	Cooling capacity	Btu/h	208,000	
		kW	61.0	
	Power input	kW	19.1	
Heating	Heating capacity	Btu/h	218,000	
		kW	64.0	
	Power input	kW	19.5	
Max. input consumption		kW	27.0	
Max. current		A	55.4	
Performance	Indoor air flow	CFM	7,600	
	ESP	Pa	Default: 110; 0 - 250	
	EER	Btu/h.W	10.9	
	COP	Btu/h.W	11.2	
Indoor coil	Number of rows	\	3	
	Fin spacing	mm	1.3	
	Fin type	\	Hydrophilic aluminum fin	
	Tube diameter	mm	Φ7	
	Tube type	\	Inner grooved copper pipe	
Indoor fan	Type / Quantity	\	Centrifugal / 2	
	Drive type	\	Belt	
	Motor quantity	\	1	
	Motor model	\	YE2-112M-4-4KW	
	Motor capacitor	\	\	
	Motor input	W	\	
	Motor speed	RPM	1,440	
Compressor	Type / Quantity	\	Scroll / 2	
	Model	\	ZP122KCE-TFD-522	ZP122KCE-TFD-522
	Brand	\	Copeland	Copeland
	Capacity	W	29,900	29,900
	Input	W	9,190	9,190
	RLA	A	18	18
	LRA	A	127	127
	Refrigerant oil	ml	2,513	2,513
Outdoor coil	Number of rows	\	2.5+2.5	
	Fin spacing	mm	1.5+1.5	
	Fin type	\	Hydrophilic aluminum fin	
	Tube diameter	mm	Φ7+Φ7	
	Tube type	\	Inner grooved copper pipe	

Continued:

Nominal ton		**(Ton)**	**17.5**
Model			**MRC-175HWN1-R(C)**
Outdoor fan	Type	\	Axial
	Quantity	\	2
	Drive type	\	Direct
	Motor quantity	\	2
	Motor model	\	YDK550-6E
	Motor capacitor	\	25μF/450V
	Motor input	W	740/640
	Fan speed	RPM	880/810
Refrigerant	Type	\	R410A
	Volume	kg	5.8+5.8
	Control	\	Throttle valve
Sound pressure level		dB(A)	76.0
Wired controller		\	KJR-12B/dP(T)-E(B)
Centralized controller (Optional)		\	Yes
Ambient temperature (Cooling)		°C	10 - 46
Ambient temperature (Heating)		°C	-9 - 24
System stage		\	2
Dimensions	Net (W×H×D)	mm	1,670×1,247×2,192
	Packing (W×H×D)	mm	1,695×1,284×2,212
Weight	Net	kg	615
	Gross	kg	645

Notes:

1. Nominal ton only for reference. Cooling capacity as per specifications;

2. Cooling capacity test condition:

Outdoor ambient temperature: 35°C, indoor temperature: 26.7°CDB, 19.4°CWB;

Heating capacity test condition:

Outdoor ambient temperature: 7°CDB, 6°CWB, indoor temperature: 20°C;

3. Units are suitable for operation to ±20% of nominal indoor air flow.

4. ESP: external static pressure;

5. Sound pressure level values are measured in a semi-anechoic room, at a position 1 meter in front of the unit and (1 meter + Height of the unit) / 2 above the floor;

6. Specifications are subject to change without prior notice for product improvement.

Nominal ton		**(Ton)**	**20**	
Model			**MRC-200HWN1-R(C)**	
Power supply		\	380 - 415V, 3Ph~, 50Hz	
Cooling	Cooling capacity	Btu/h	240,000	
		kW	70.0	
	Power input	kW	22.6	
Heating	Heating capacity	Btu/h	260,000	
		kW	75.0	
	Power input	kW	23.6	
Max. input consumption		kW	32.5	
Max. current		A	63.2	
Performance	Indoor air flow	CFM	8,800	
	ESP	Pa	Default: 120; 0 - 375	
	EER	Btu/h.W	10.6	
	COP	Btu/h.W	11.0	
Indoor coil	Number of rows	\	4	
	Fin spacing	mm	1.3	
	Fin type	\	Hydrophilic aluminum fin	
	Tube diameter	mm	Φ7	
	Tube type	\	Inner grooved copper pipe	
Indoor fan	Type / Quantity	\	Centrifugal / 2	
	Drive type	\	Belt	
	Motor quantity	\	1	
	Motor model	\	YE2-132S-4-5.5KW	
	Motor capacitor	\	\	
	Motor input	W	\	
	Motor speed	RPM	1,440	
Compressor	Type / Quantity	\	Scroll / 2	
	Model	\	ZP144KCE-TFD-522	ZP144KCE-TFD-522
	Brand	\	Copeland	Copeland
	Capacity	W	35,400	35,400
	Input	W	10,800	10,800
	RLA	A	21.1	21.1
	LRA	A	144	144
	Refrigerant oil	ml	3,253	3,253
Outdoor coil	Number of rows	\	3	
	Fin spacing	mm	1.5+1.5	
	Fin type	\	Hydrophilic aluminum fin	
	Tube diameter	mm	Φ7+Φ7	
	Tube type	\	Inner grooved copper pipe	

Continued:

Nominal ton		**(Ton)**	**20**
Model			**MRC-200HWN1-R(C)**
Outdoor fan	Type	\	Axial
	Quantity	\	2
	Drive type	\	Direct
	Motor quantity	\	2
	Motor model	\	YS1100-6-3
	Motor capacitor	\	\
	Motor input	W	\
	Fan speed	RPM	1,090/944
Refrigerant	Type	\	R410A
	Volume	kg	6.9+6.9
	Control	\	Throttle valve
Sound pressure level		dB(A)	75.3
Wired controller		\	KJR-12B/dP(T)-E(B)
Centralized controller (Optional)		\	Yes
Ambient temperature (Cooling)		°C	10 - 46
Ambient temperature (Heating)		°C	-9 - 24
System stage		\	2
Dimensions	Net (W×H×D)	mm	1,670×1,247×2,192
	Packing (W×H×D)	mm	1,695×1,284×2,212
Weight	Net	kg	690
	Gross	kg	720

Notes:

1. Nominal ton only for reference. Cooling capacity as per specifications;

2. Cooling capacity test condition:

Outdoor ambient temperature: 35°C, indoor temperature: 26.7°CDB, 19.4°CWB;

Heating capacity test condition:

Outdoor ambient temperature: 7°CDB, 6°CWB, indoor temperature: 20°C;

3. Units are suitable for operation to ±20% of nominal indoor air flow.

4. ESP: external static pressure;

5. Sound pressure level values are measured in a semi-anechoic room, at a position 1 meter in front of the unit and (1 meter + Height of the unit) / 2 above the floor;

6. Specifications are subject to change without prior notice for product improvement.

Nominal ton		**(Ton)**	**25**	
Model			**MRC-250HWN1-R(C)**	
Power supply		\	380 - 415V, 3Ph~, 50Hz	
Cooling	Cooling capacity	Btu/h	300,000	
		kW	88.0	
	Power input	kW	28.9	
Heating	Heating capacity	Btu/h	330,000	
		kW	97.0	
	Power input	kW	30.3	
Max. input consumption		kW	38.5	
Max. current		A	74.3	
Performance	Indoor air flow	CFM	10,000	
	ESP	Pa	Default: 110; 0 - 350	
	EER	Btu/h.W	10.4	
	COP	Btu/h.W	10.9	
Indoor coil	Number of rows	\	4	
	Fin spacing	mm	1.6	
	Fin type	\	Hydrophilic aluminum fin	
	Tube diameter	mm	Φ8	
	Tube type	\	Inner grooved copper pipe	
Indoor fan	Type / Quantity	\	Centrifugal / 2	
	Drive type	\	Belt	
	Motor quantity	\	1	
	Motor model	\	YE2-132M-4-7.5KW	
	Motor capacitor	\	\	
	Motor input	W	\	
	Motor speed	RPM	1,440	
Compressor	Type / Quantity	\	Scroll / 2	
	Model	\	SH161A4ALC	SH161A4ALC
	Brand	\	Danfoss	Danfoss
	Capacity	W	38,800	38,800
	Input	W	12,145	12,145
	RLA	A	23.6	23.6
	LRA	A	158	158
	Refrigerant oil	ml	3,300	3,300
Outdoor coil	Number of rows	\	3+2+3+2	
	Fin spacing	mm	1.6+1.6+1.6+1.6	
	Fin type	\	Hydrophilic aluminum fin	
	Tube diameter	mm	Φ8+Φ8+Φ8+Φ8	
	Tube type	\	Inner grooved copper pipe	

Continued:

Nominal ton		**(Ton)**	**25**
Model			**MRC-250HWN1-R(C)**
Outdoor fan	Type	\	Axial
	Quantity	\	2
	Drive type	\	Direct
	Motor quantity	\	2
	Motor model	\	YS1500-6-2
	Motor capacitor	\	\
	Motor input	W	\
	Fan speed	RPM	910
Refrigerant	Type	\	R410A
	Volume	kg	8.7+8.7
	Control	\	Capillary
Sound pressure level		dB(A)	76.8
Wired controller		\	KJR-12B/dP(T)-E(B)
Centralized controller (Optional)		\	Yes
Ambient temperature (Cooling)		°C	10 - 46
Ambient temperature (Heating)		°C	-9 - 24
System stage		\	2
Dimensions	Net (W×H×D)	mm	2,320×1,245×2,220
	Packing (W×H×D)	mm	2,330×1,275×2,230
Weight	Net	kg	940
	Gross	kg	970

Notes:

1. Nominal ton only for reference. Cooling capacity as per specifications;

2. Cooling capacity test condition:

Outdoor ambient temperature: 35°C, indoor temperature: 26.7°CDB, 19.4°CWB;

Heating capacity test condition:

Outdoor ambient temperature: 7°CDB, 6°CWB, indoor temperature: 20°C;

3. Units are suitable for operation to ±20% of nominal indoor air flow.

4. ESP: external static pressure;

5. Sound pressure level values are measured in a semi-anechoic room, at a position 1 meter in front of the unit and (1 meter + Height of the unit) / 2 above the floor;

6. Specifications are subject to change without prior notice for product improvement.

Nominal ton		**(Ton)**	**30**	
Model			**MRC-300HWN1-R(C)**	
Power supply		\	380 - 415V, 3Ph~, 50Hz	
Cooling	Cooling capacity	Btu/h	335,000	
		kW	98.0	
	Power input	kW	32.8	
Heating	Heating capacity	Btu/h	380,000	
		kW	111.5	
	Power input	kW	36.5	
Max. input consumption		kW	49.5	
Max. current		A	81.7	
Performance	Indoor air flow	CFM	11,200	
	ESP	Pa	Default: 270; 25 - 400	
	EER	Btu/h.W	10.2	
	COP	Btu/h.W	10.4	
Indoor coil	Number of rows	\	4	
	Fin spacing	mm	1.6	
	Fin type	\	Hydrophilic aluminum fin	
	Tube diameter	mm	Φ8	
	Tube type	\	Inner grooved copper pipe	
Indoor fan	Type / Quantity	\	Centrifugal / 2	
	Drive type	\	Belt	
	Motor quantity	\	1	
	Motor model	\	YE2-132M-4-7.5KW	
	Motor capacitor	\	\	
	Motor input	W	\	
	Motor speed	RPM	1,440	
Compressor	Type / Quantity	\	Scroll / 2	
	Model	\	SH184A4ALC	SH184A4ALC
	Brand	\	Danfoss	Danfoss
	Capacity	W	44,661	44,661
	Input	W	13,732	13,732
	RLA	A	27.6	27.6
	LRA	A	197	197
	Refrigerant oil	ml	3,600	3,600
Outdoor coil	Number of rows	\	3+3+3+3	
	Fin spacing	mm	1.6+1.6+1.6+1.6	
	Fin type	\	Hydrophilic aluminum fin	
	Tube diameter	mm	Φ8+Φ8+Φ8+Φ8	
	Tube type	\	Inner grooved copper pipe	

Nominal ton		**(Ton)**	**30**
Model			**MRC-300HWN1-R(C)**
Outdoor fan	Type	\	Axial
	Quantity	\	2
	Drive type	\	Direct
	Motor quantity	\	2
	Motor model	\	YS1500-6-2
	Motor capacitor	\	\
	Motor input	W	\
	Fan speed	RPM	910
Refrigerant	Type	\	R410A
	Volume	kg	10+10
	Control	\	Capillary
Sound pressure level		dB(A)	77.9
Wired controller		\	KJR-12B/dP(T)-E(B)
Centralized controller (Optional)		\	Yes
Ambient temperature (Cooling)		°C	10 - 46
Ambient temperature (Heating)		°C	-9 -24
System stage		\	2
Dimensions	Net (W×H×D)	mm	2,320×1,245×2,220
	Packing (W×H×D)	mm	2,330×1,275×2,230
Weight	Net	kg	970
	Gross	kg	1,000

Notes:

1. Nominal ton only for reference. Cooling capacity as per specifications;

2. Cooling capacity test condition:

Outdoor ambient temperature: 35°C, indoor temperature: 26.7°CDB, 19.4°CWB;

Heating capacity test condition:

Outdoor ambient temperature: 7°CDB, 6°CWB, indoor temperature: 20°C;

3. Units are suitable for operation to ±20% of nominal indoor air flow.

4. ESP: external static pressure;

5. Sound pressure level values are measured in a semi-anechoic room, at a position 1 meter in front of the unit and (1 meter + Height of the unit) / 2 above the floor;

6. Specifications are subject to change without prior notice for product improvement.

3. Dimensions drawings

MRC-062HWN1-R(C), MRC-075HWN1-R(C): (Unit: mm)

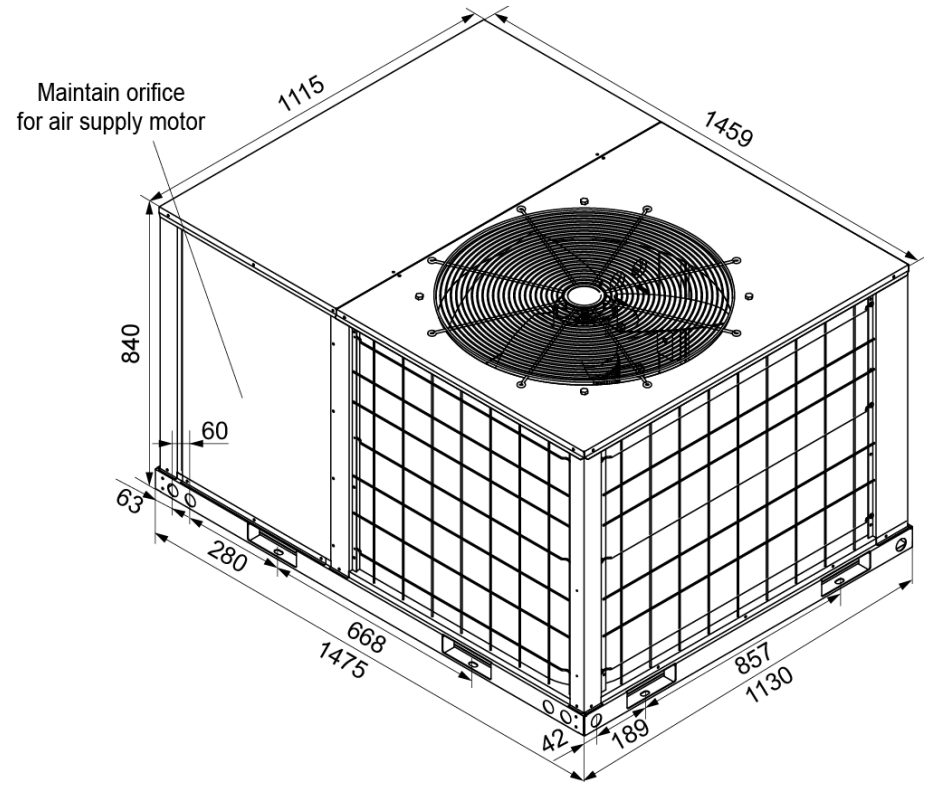

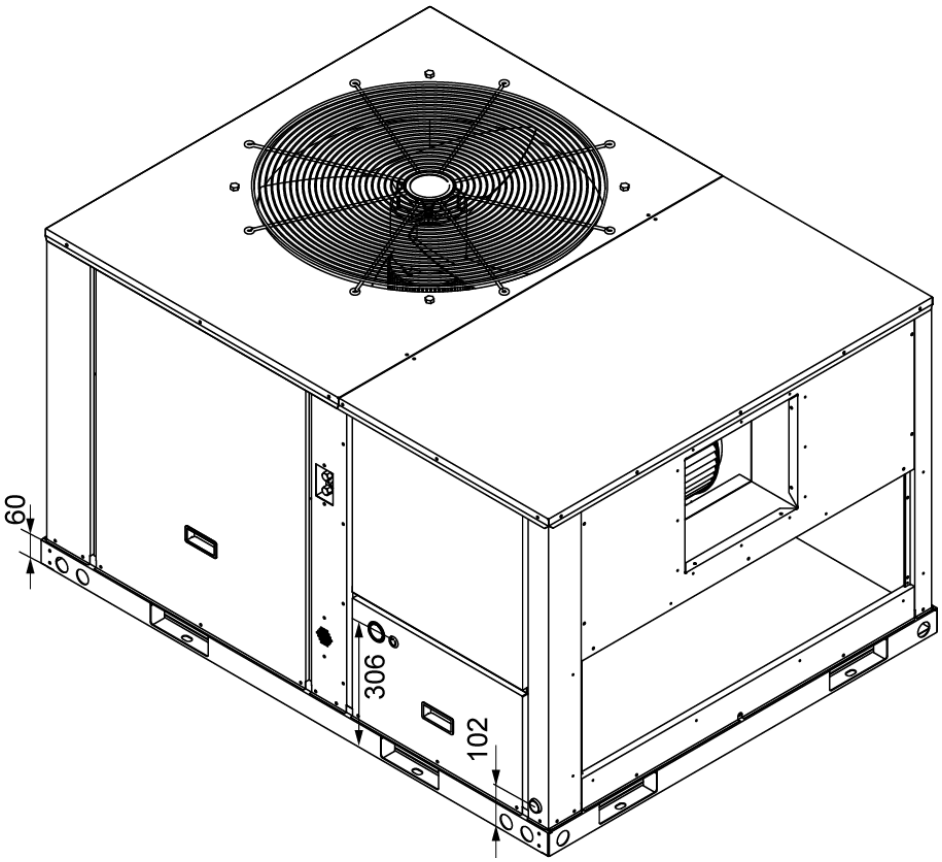

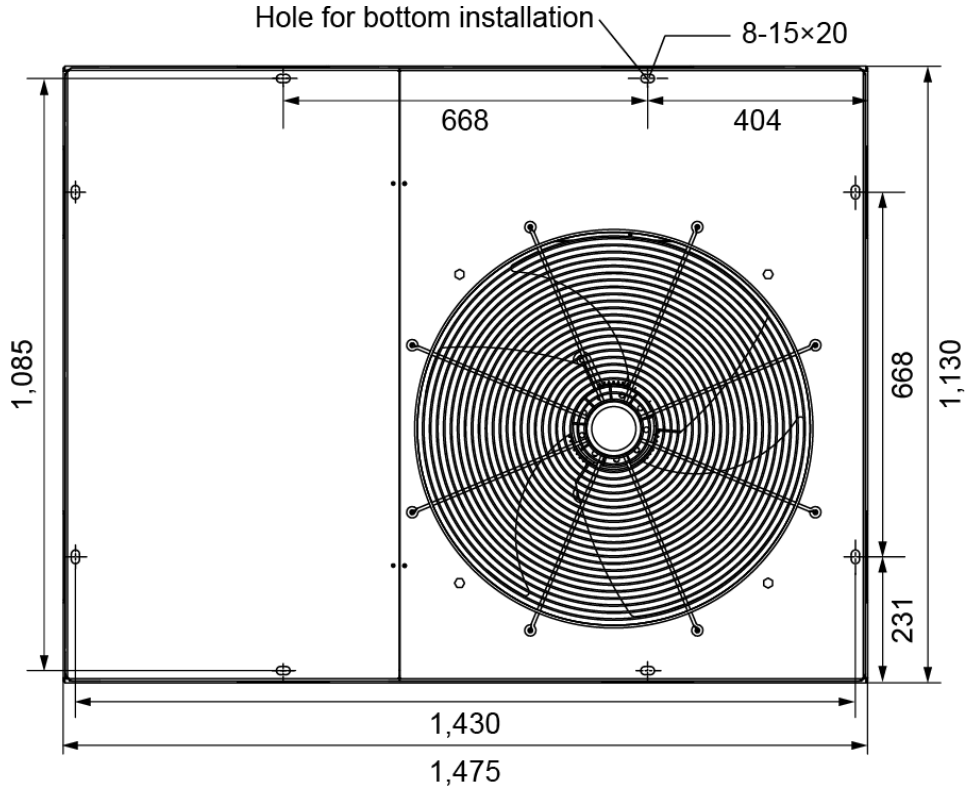
Hole for bottom installation
8-15×20
668
404
1,085
668
1,130
231
1,430
1,475

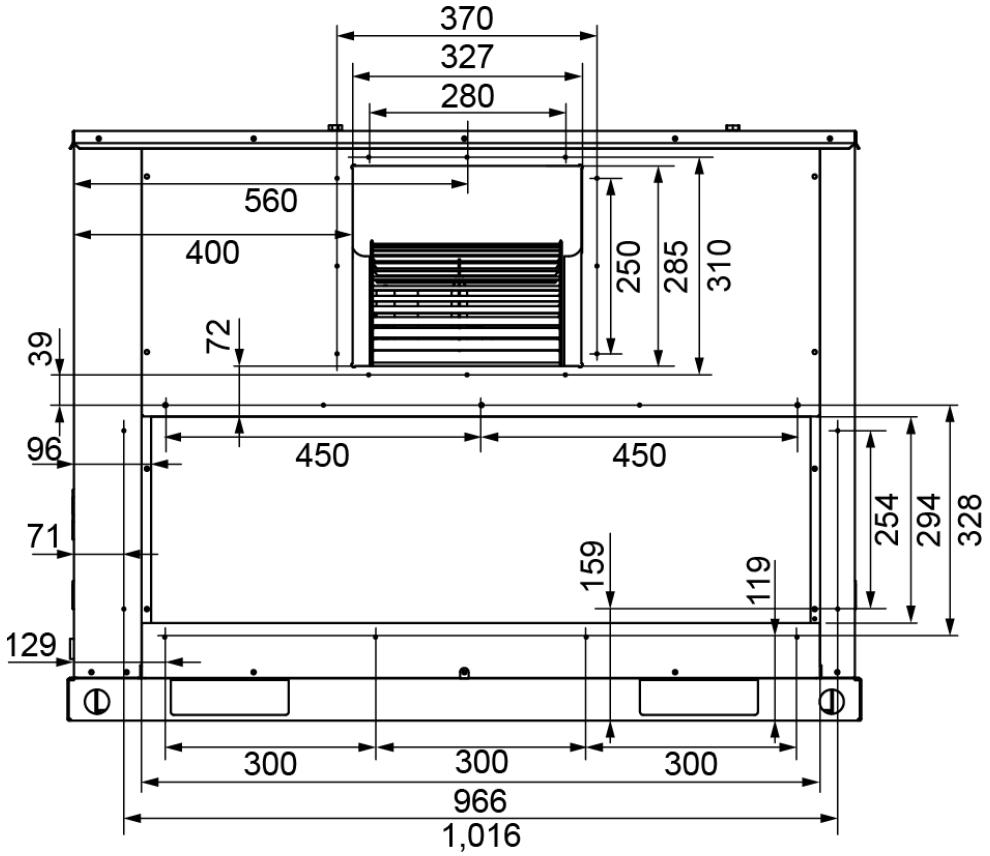
370
327
280
560
400
250
285
310
39
72
96
450
450
254
294
328
71
159
119
129
300
300
300
966
1,016

MRC-085HWN1-R(C), MRC-100HWN1-R(C) (Unit: mm)

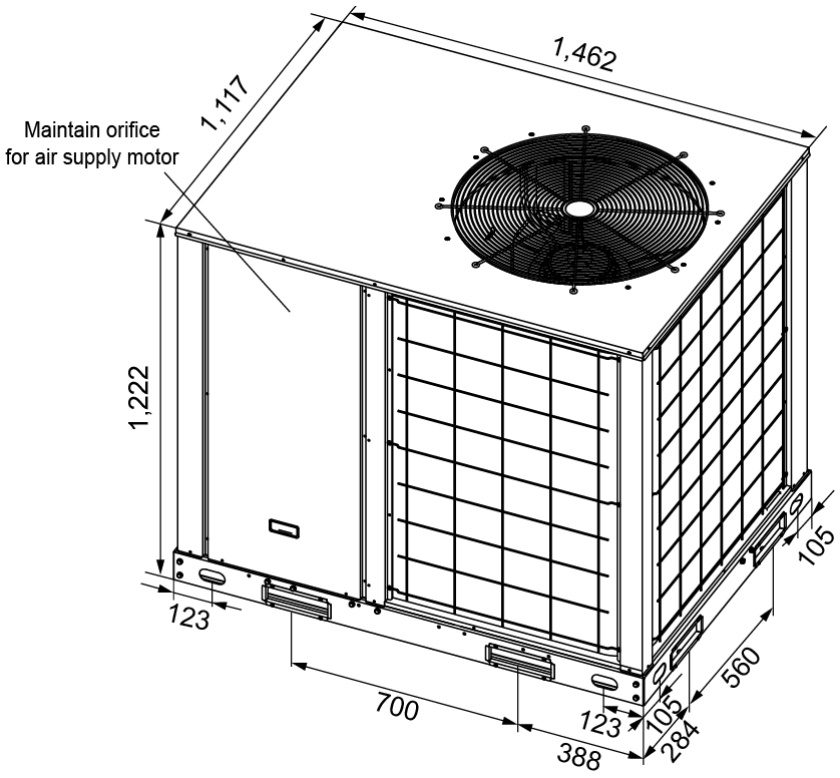

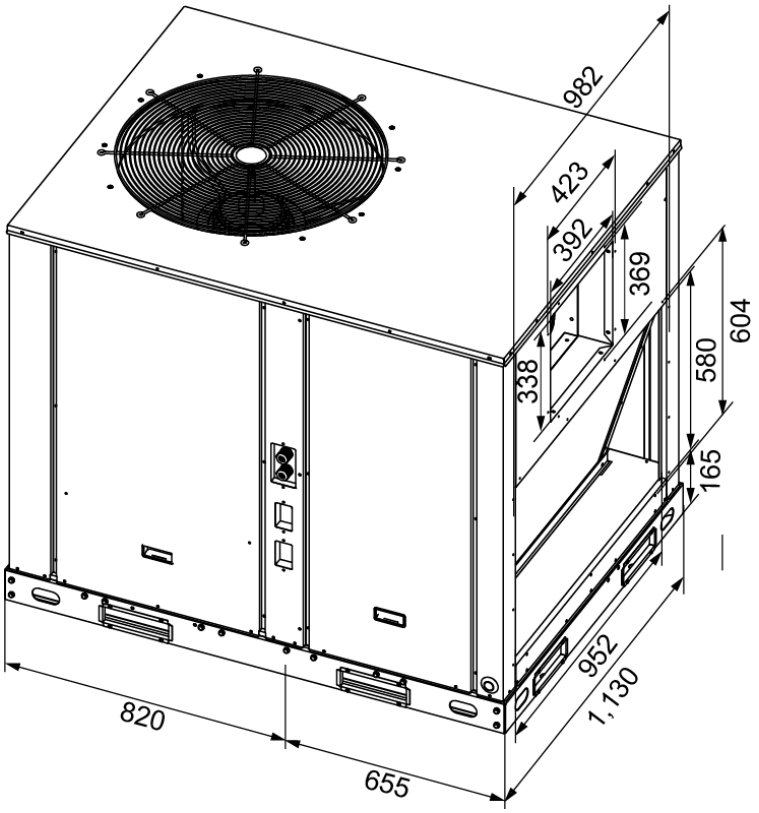

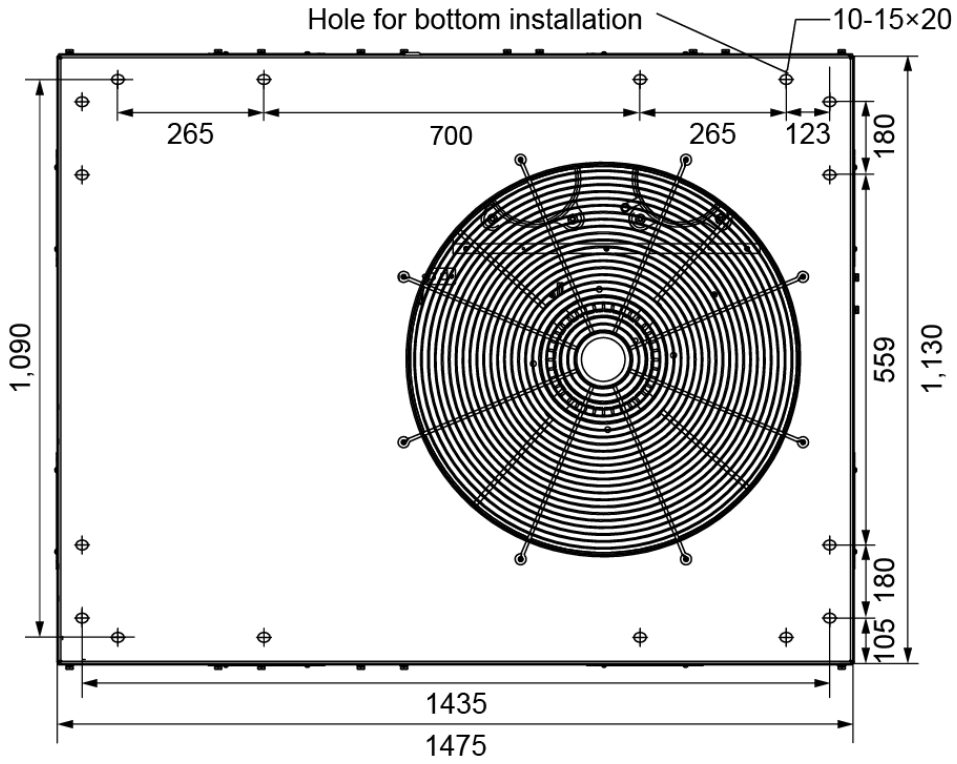
Hole for bottom installation
10-15×20
265
700
265
123
180
559
1,130
1,090
180
105
1435
1475

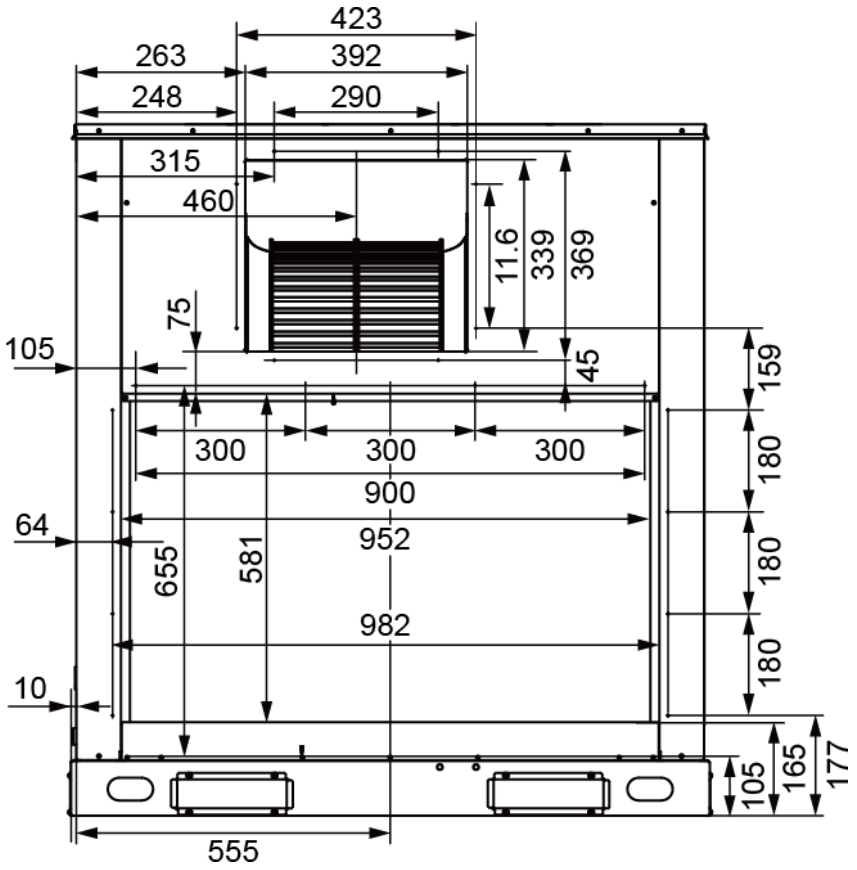
423
263
392
248
290
315
460
11.6
339
369
75
105
45
159
180
180
180
300
300
300
900
952
982
64
655
581
10
105
165
177
555

MRC-125HWN1-R(C), MRC-150HWN1-R(C): (Unit: mm)

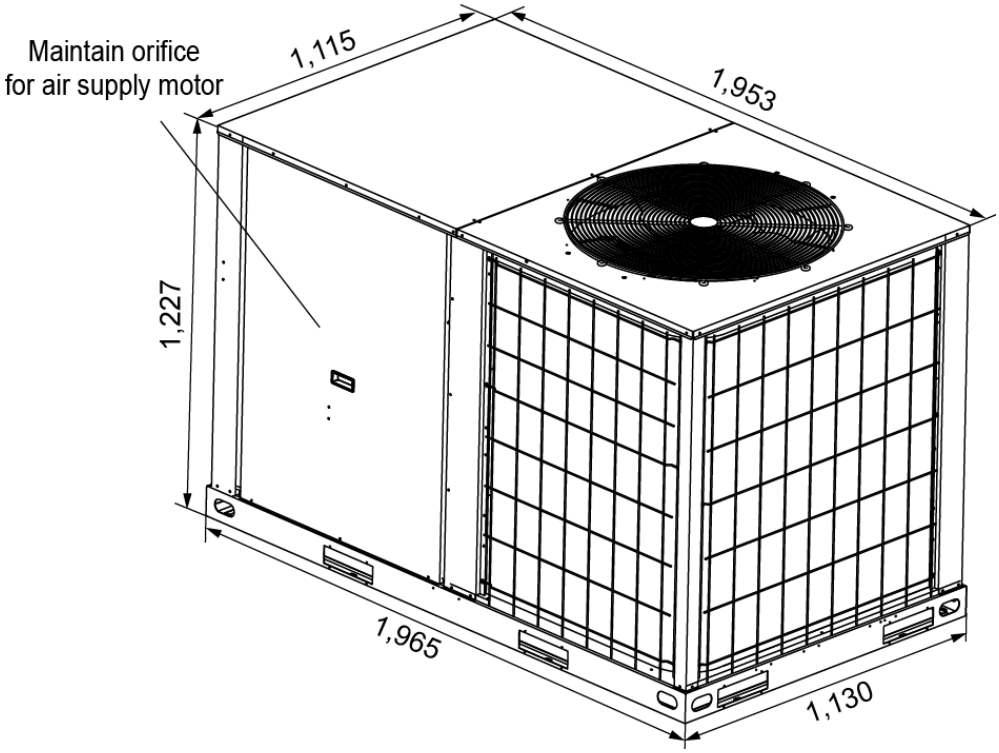

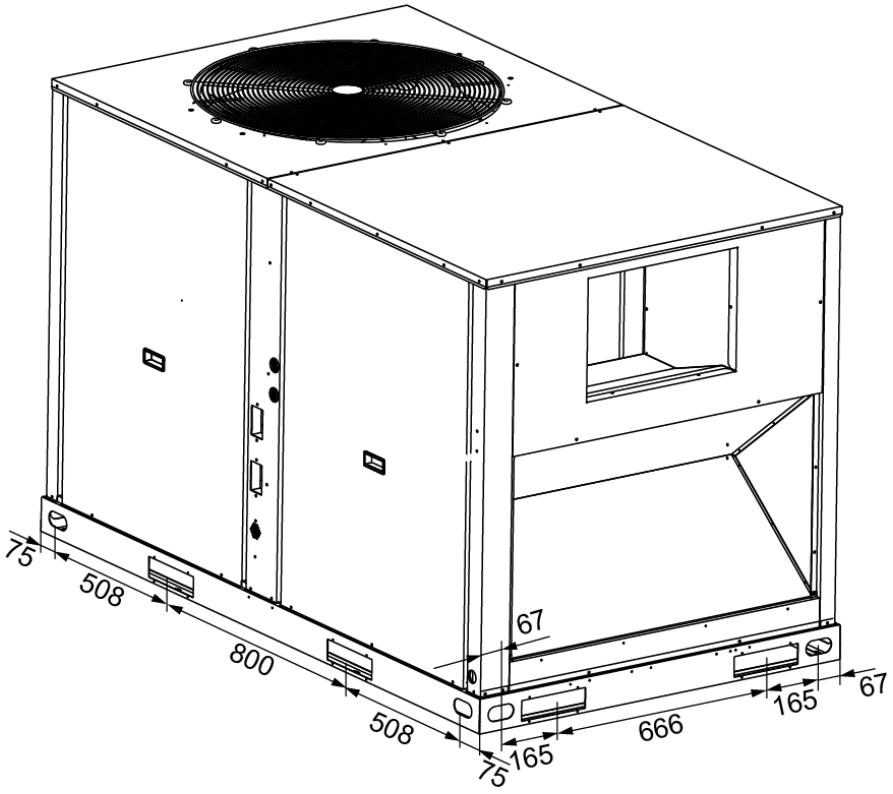

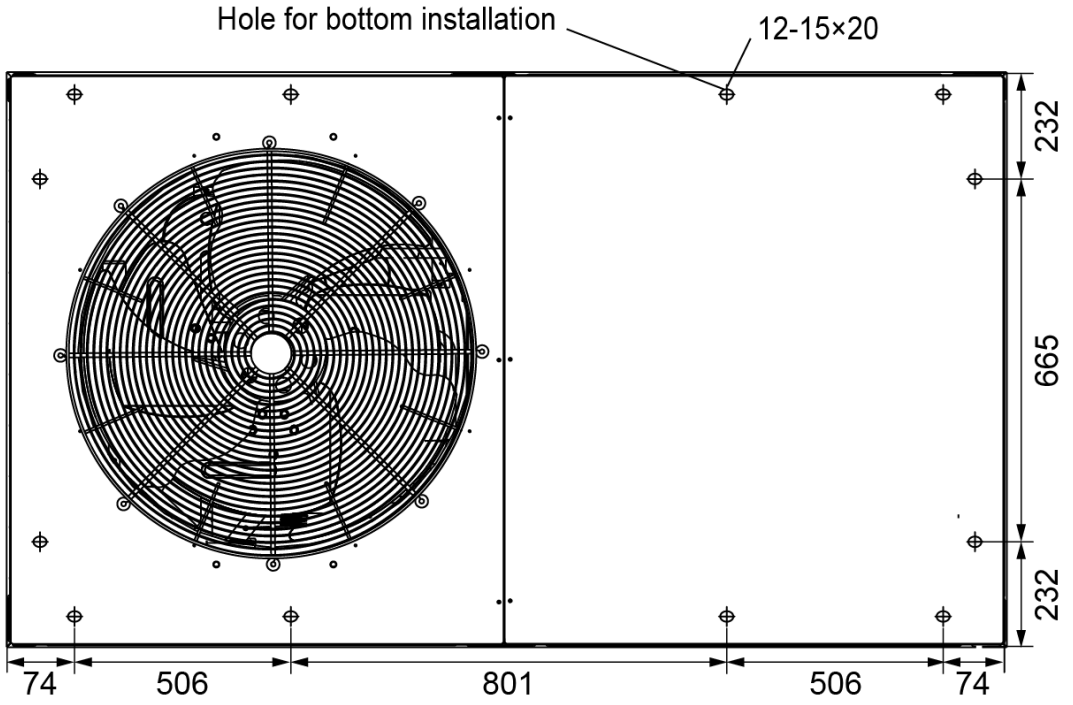
Hole for bottom installation
12-15×20
232
665
232
74
506
801
506
74

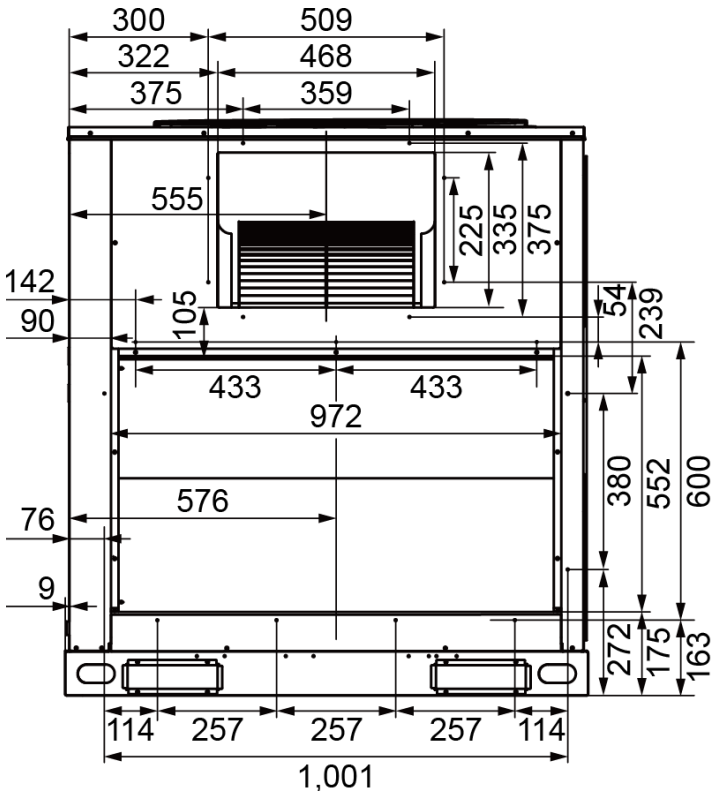
300
509
322
468
375
359
555
225
335
375
142
90
105
54
239
433
433
972
380
552
600
576
76
9
272
175
163
114
257
257
257
114
1,001

MRC-175HWN1-R(C), MRC-200HWN1-R(C): (Unit: mm)

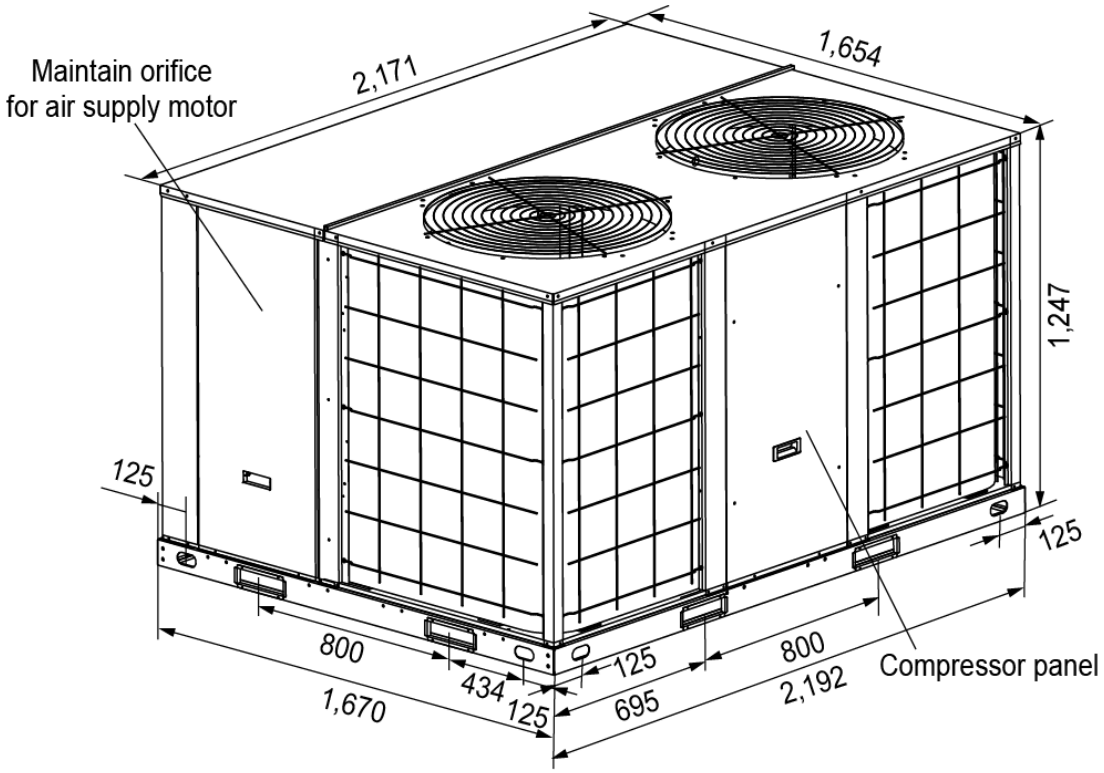

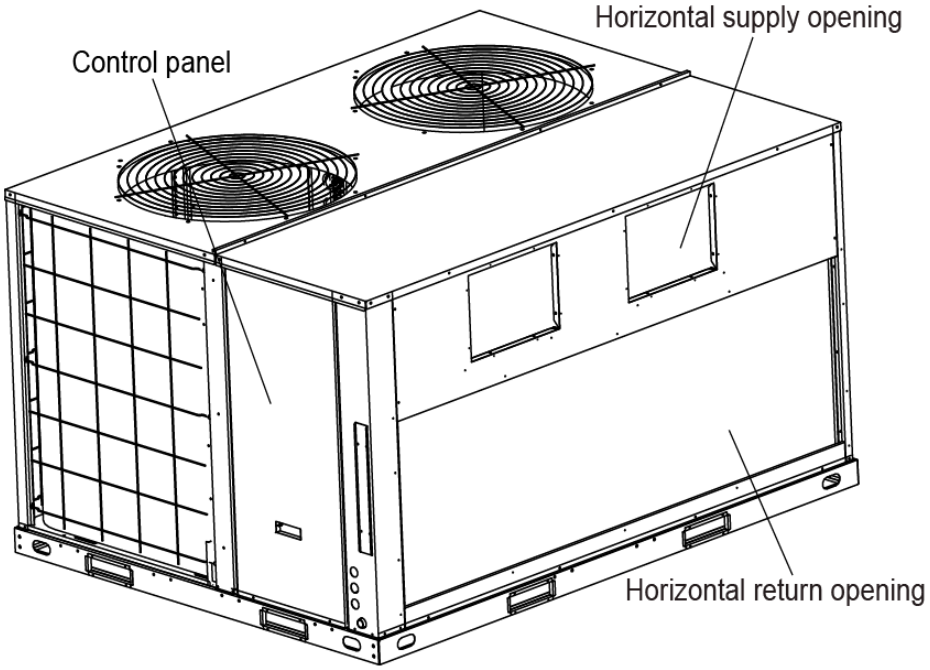

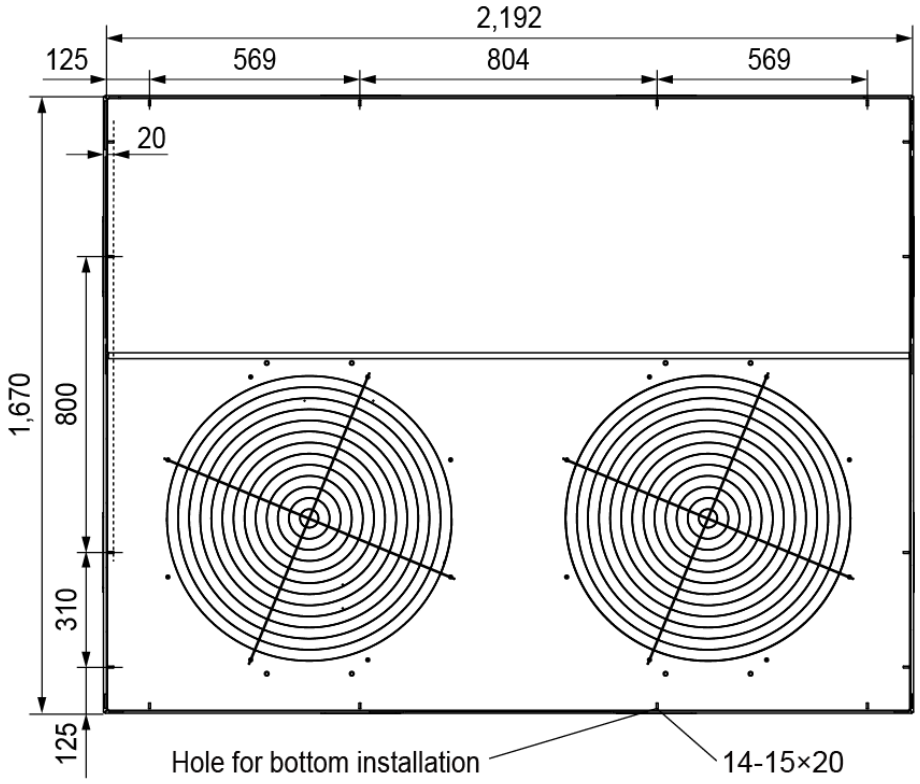
2,192
125
569
804
569
20
1,670
800
310
125
Hole for bottom installation
14-15×20

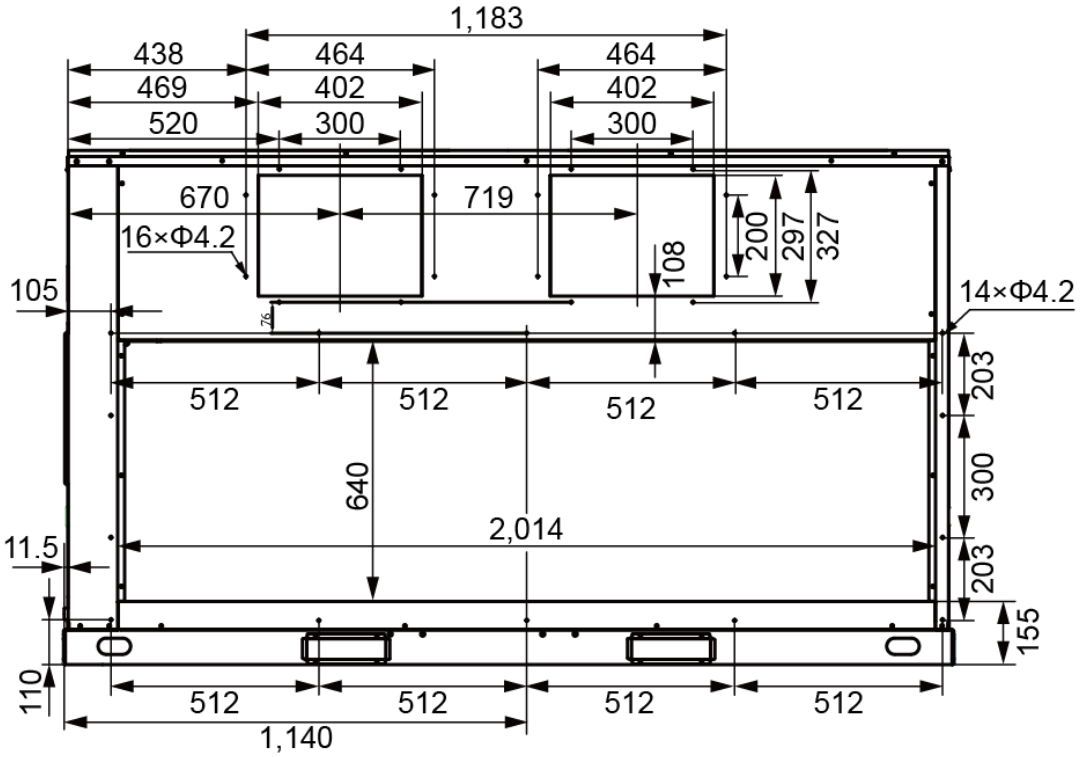
1,183
438
469
520
464
402
300
464
402
300
670
719
16×Φ4.2
105
108
200
297
327
14×Φ4.2
512
512
512
512
640
2,014
203
300
203
155
11.5
110
512
512
512
512
1,140

MRC-250HWN1-R(C), MRC-300HWN1-R(C): (Unit: mm)

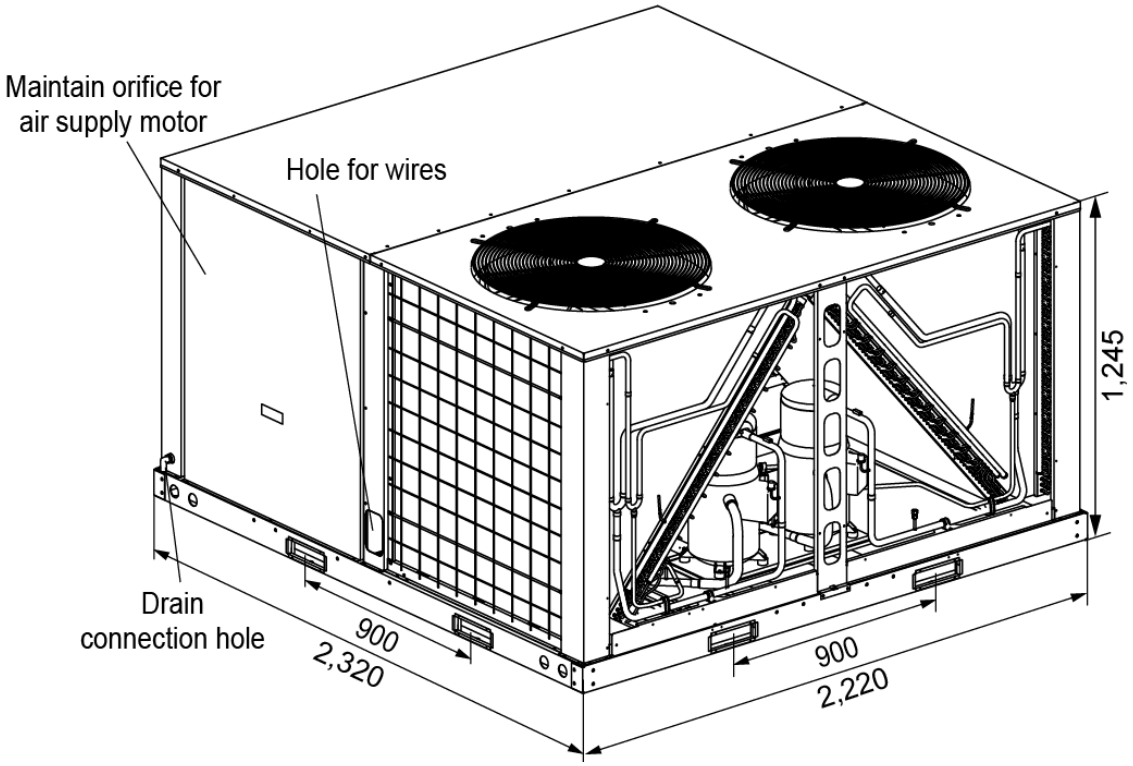

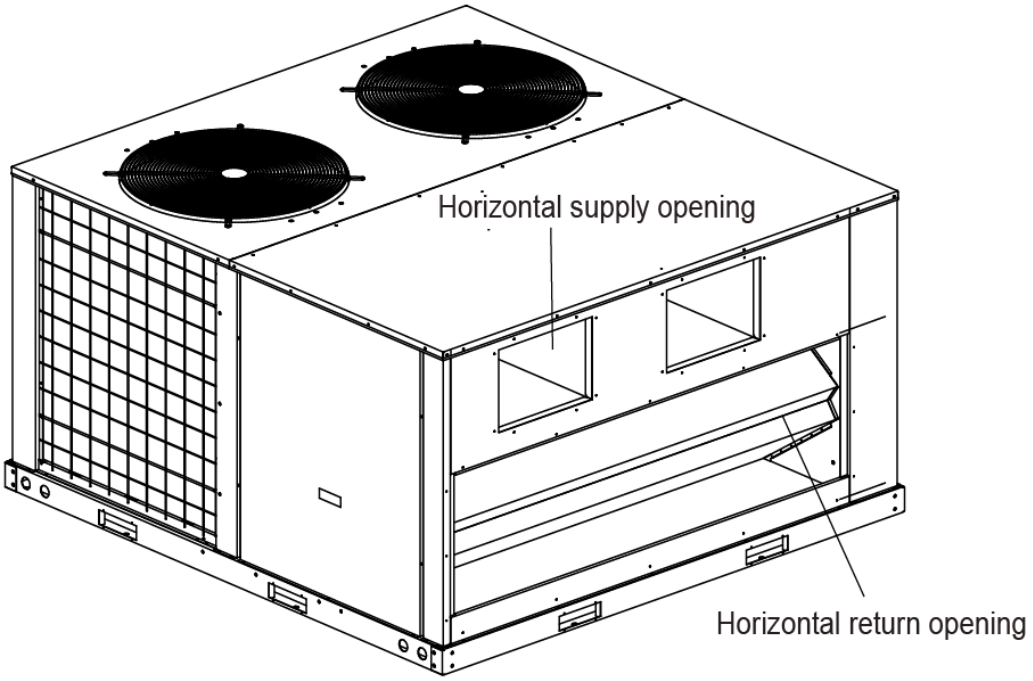

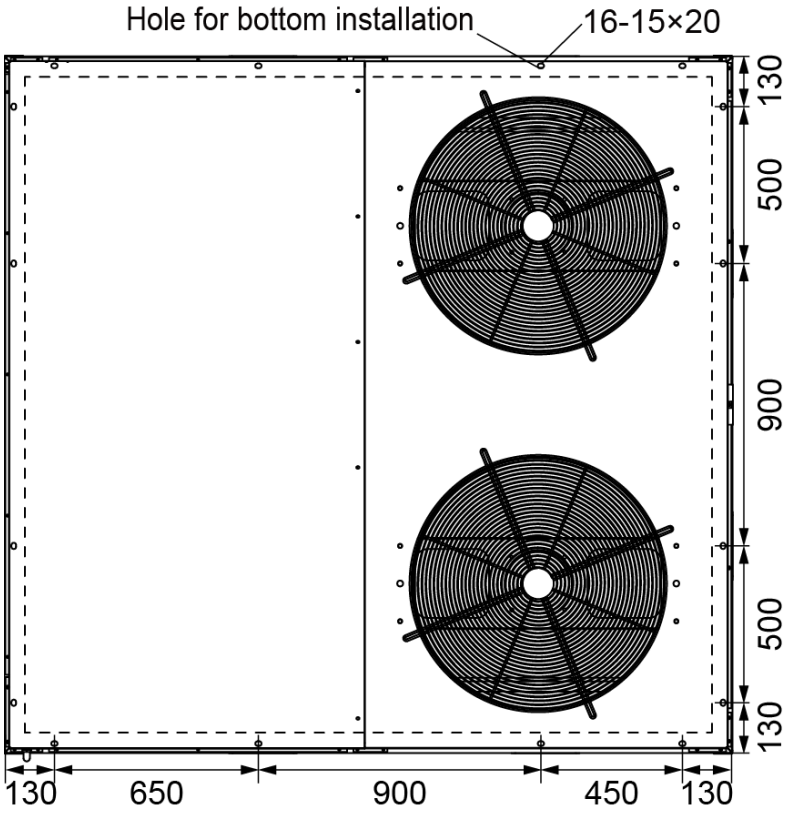
Hole for bottom installation
16-15×20
130
500
900
500
130
130
650
900
450
130

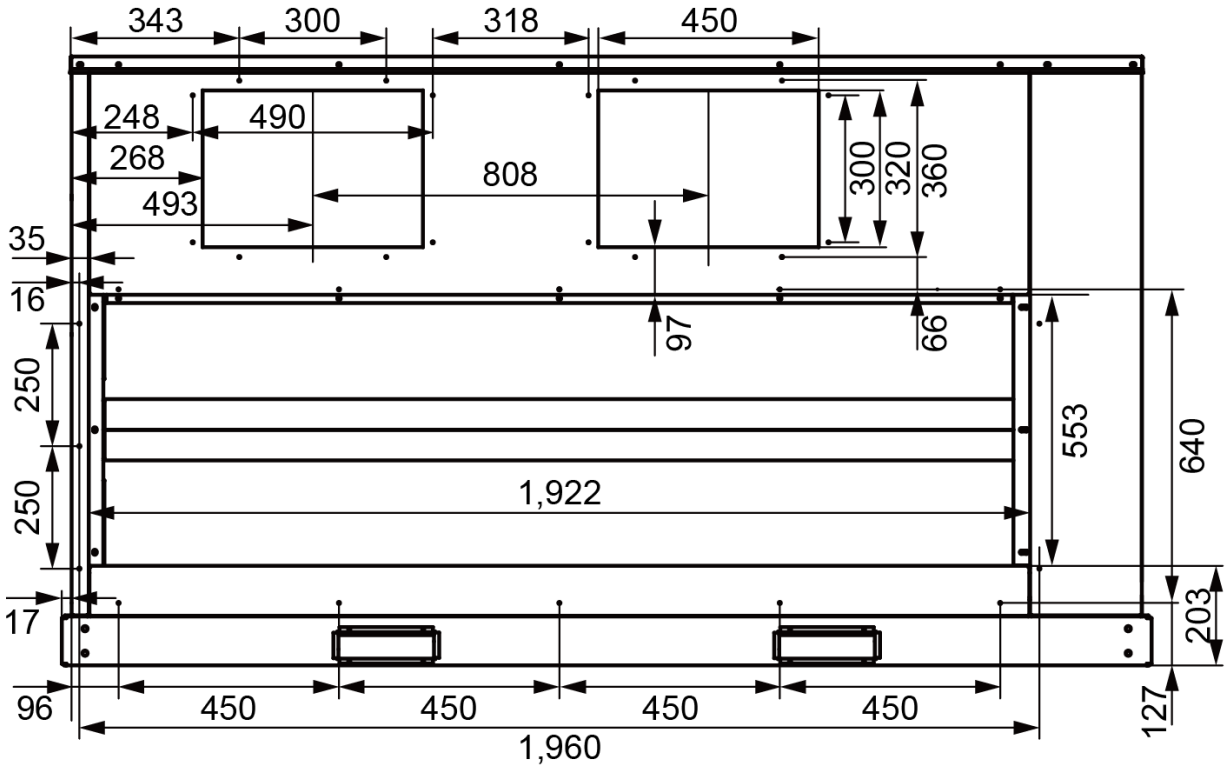
343
300
318
450
248
490
268
493
808
300
320
360
35
16
97
66
250
250
553
640
1,922
17
203
96
450
450
450
450
127
1,960

4. Wiring diagrams

MRC-062HWN1-R(C), MRC-075HWN1-R(C):

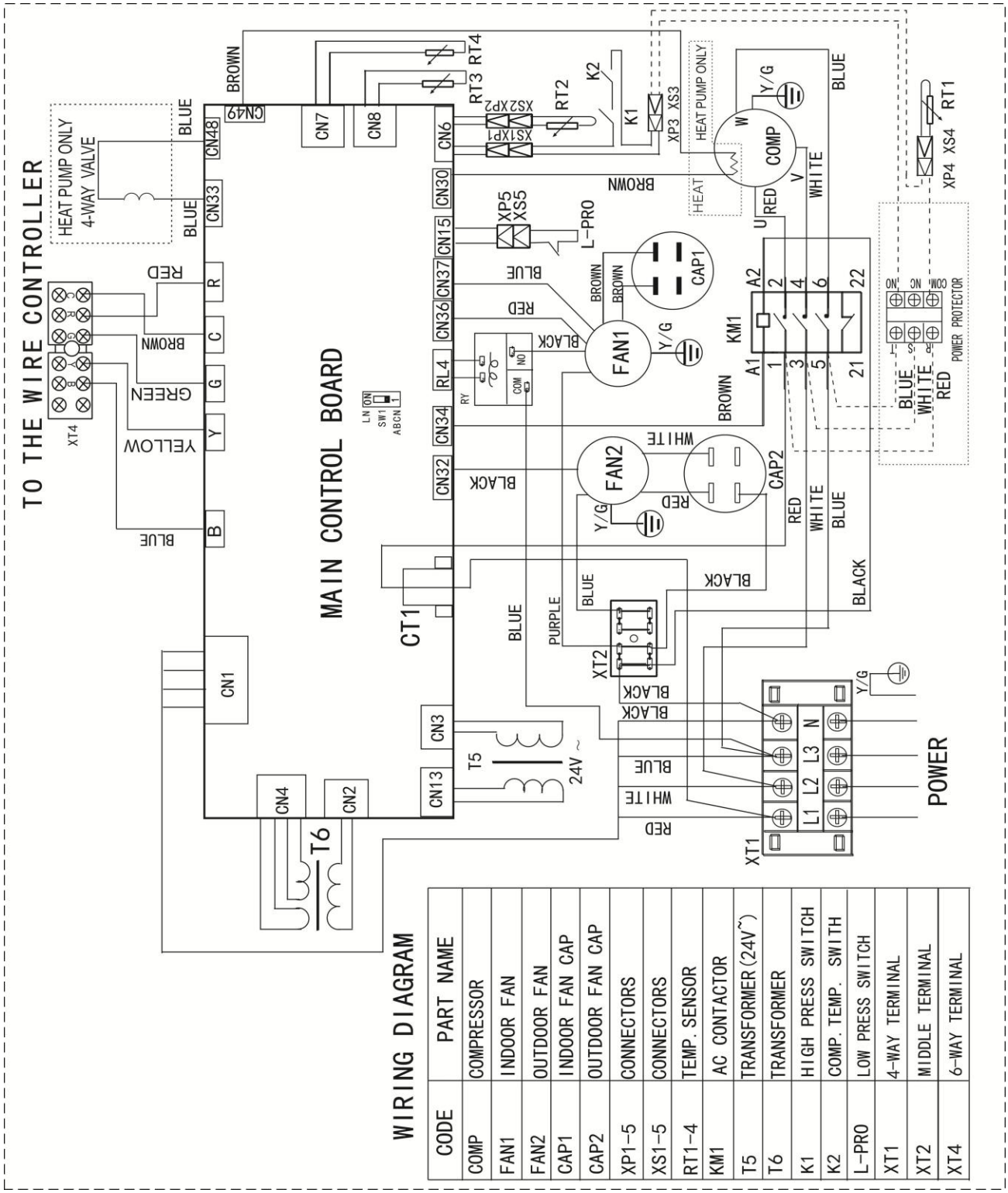

MRC-085HWN1-R(C):

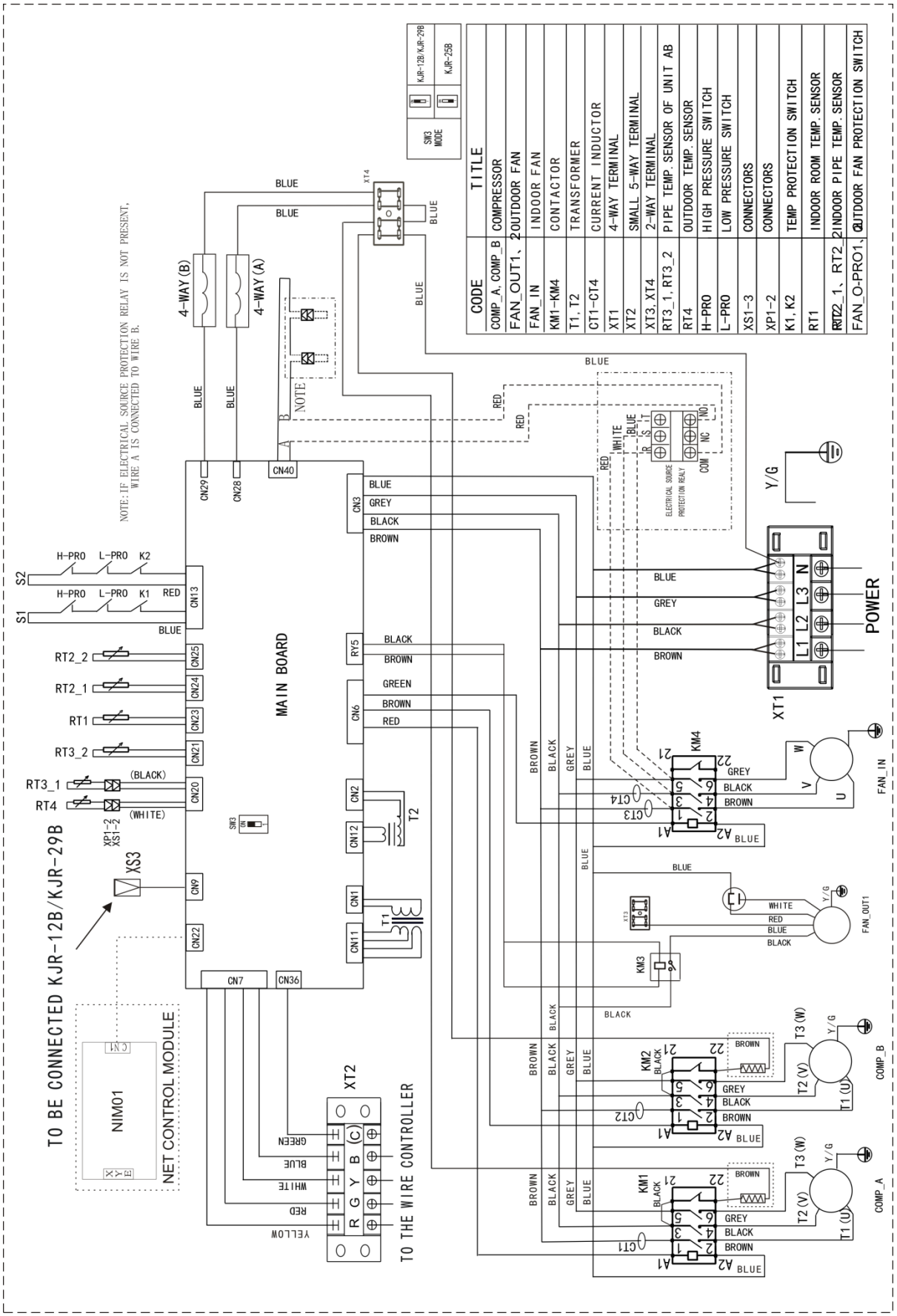

MRC-100HWN1-R(C):

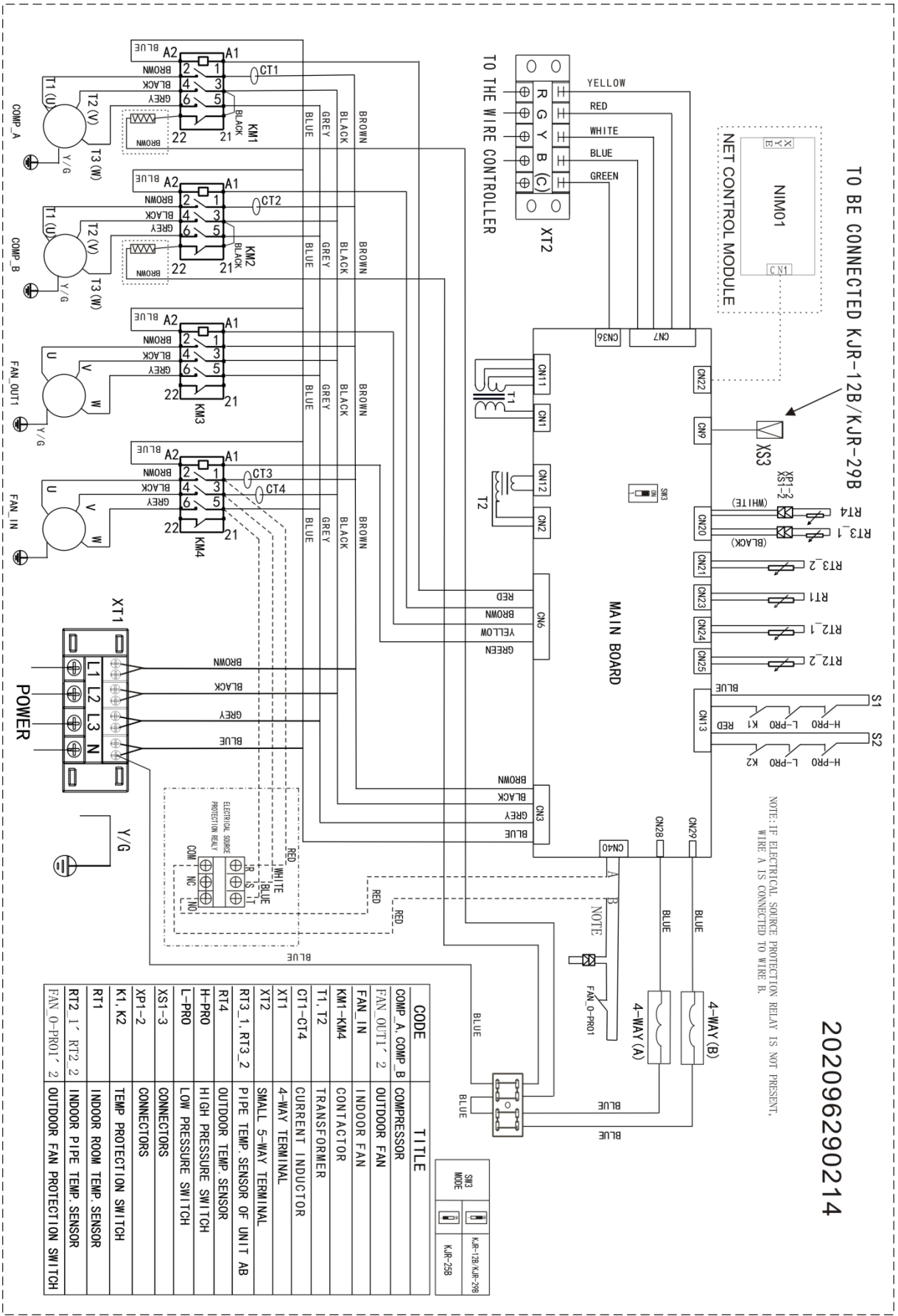

CODE	TITLE
COMP_A、COMP_B	COMPRESSOR
FAN_OUT1、2	OUTDOOR FAN
FAN_IN	INDOOR FAN
KM1-KM4	CONTACTOR
T1、T2	TRANSFORMER
CT1-CT4	CURRENT INDUCTOR
XT1	4-WAY TERMINAL
XT2	SMALL 5-WAY TERMINAL
RT3_1、RT3_2	PIPE TEMP. SENSOR OF UNIT AB
RT4	OUTDOOR TEMP. SENSOR
H-PRO	HIGH PRESSURE SWITCH
L-PRO	LOW PRESSURE SWITCH
XS1-3	CONNECTORS
XP1-2	CONNECTORS
K1、K2	TEMP PROTECTION SWITCH
RT1	INDOOR ROOM TEMP. SENSOR
RT2_1、RT2_2	INDOOR PIPE TEMP. SENSOR
FAN_O-PRO1、2	OUTDOOR FAN PROTECTION SWITCH

SW3 MODE	KJR-12B/KJR-29B	KJR-25B
	U	
		U

MRC-125HWN1-R(C), MRC-150HWN1-R(C):

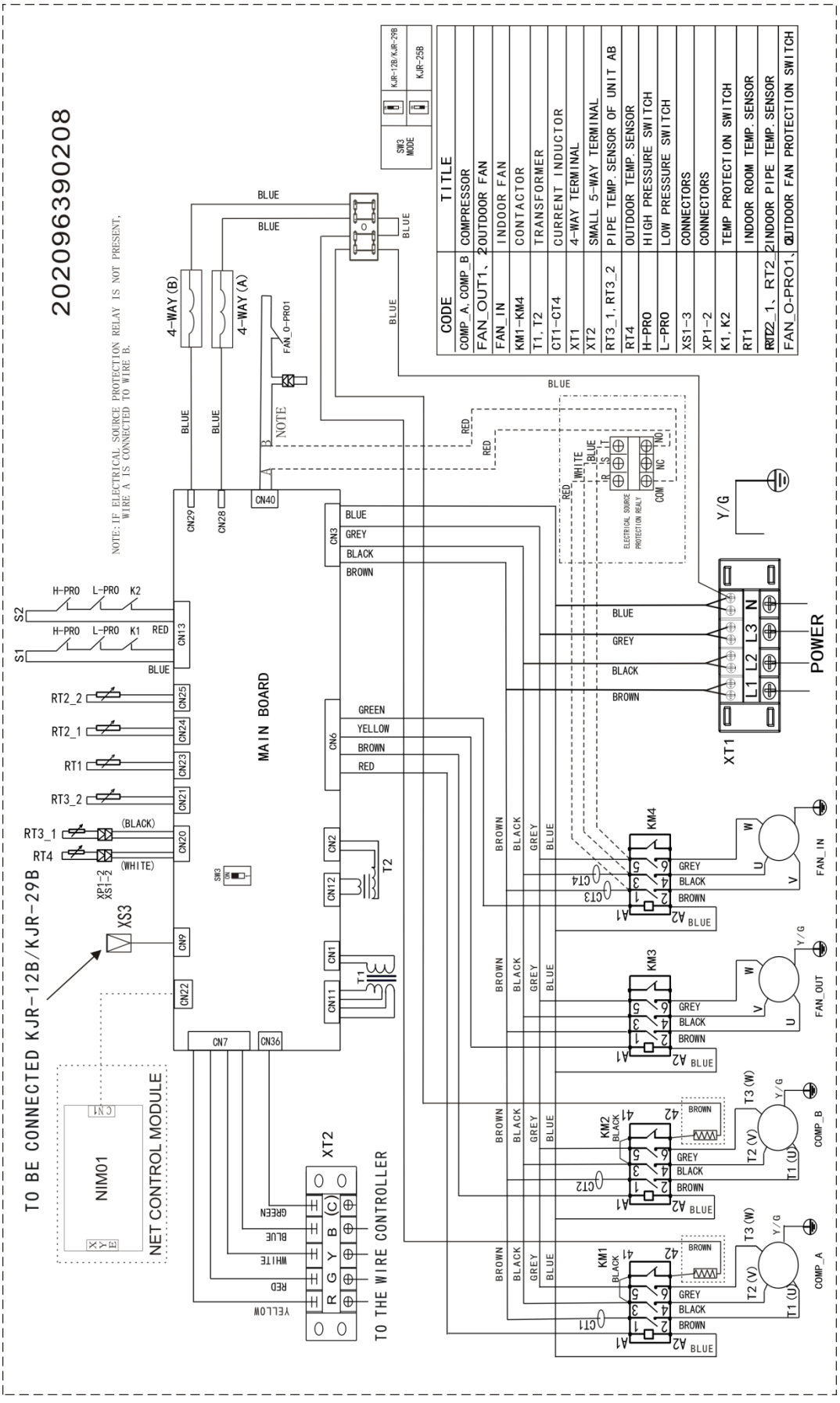

MRC-175HWN1-R(C):

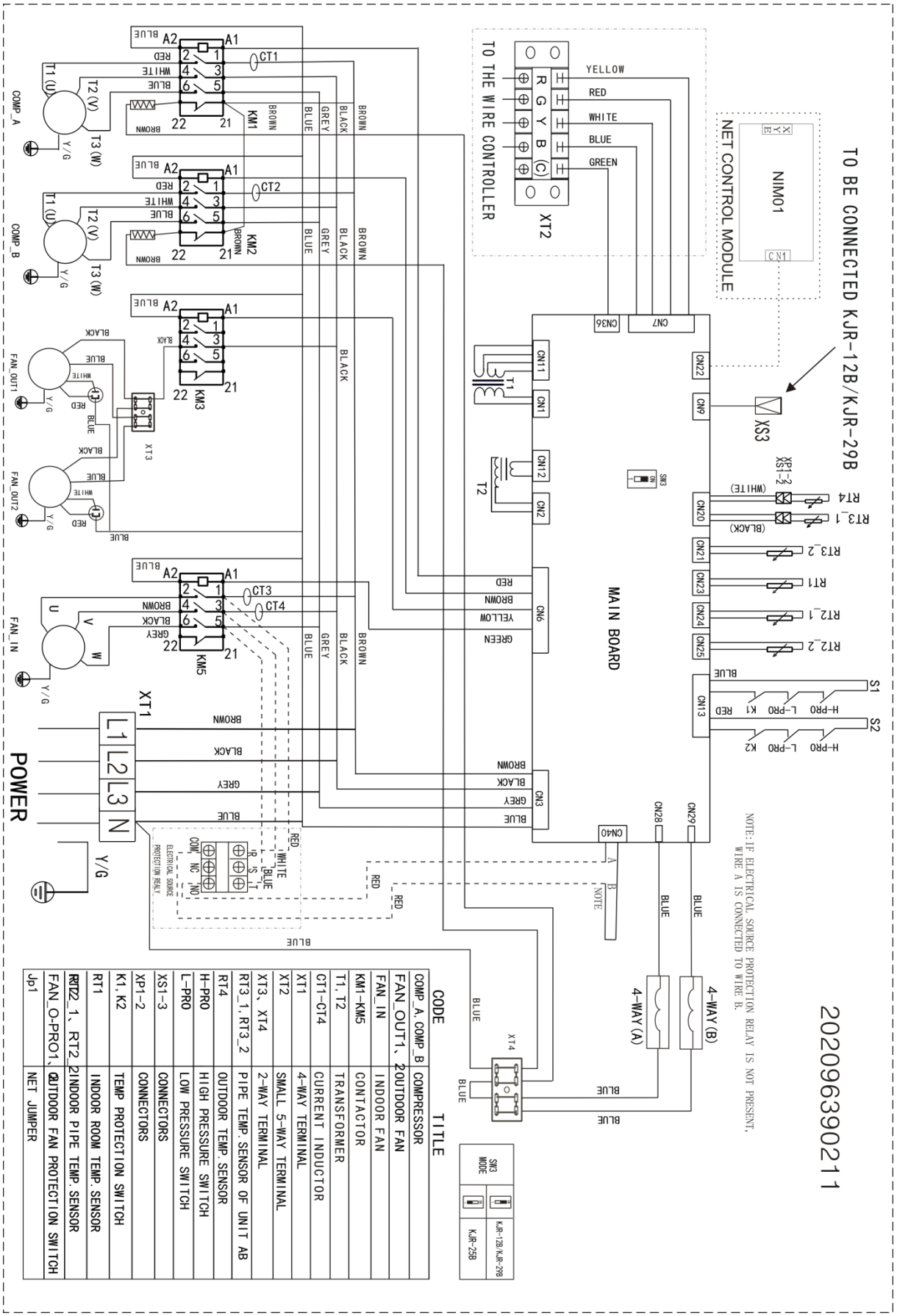

MRC-200HWN1-R(C):

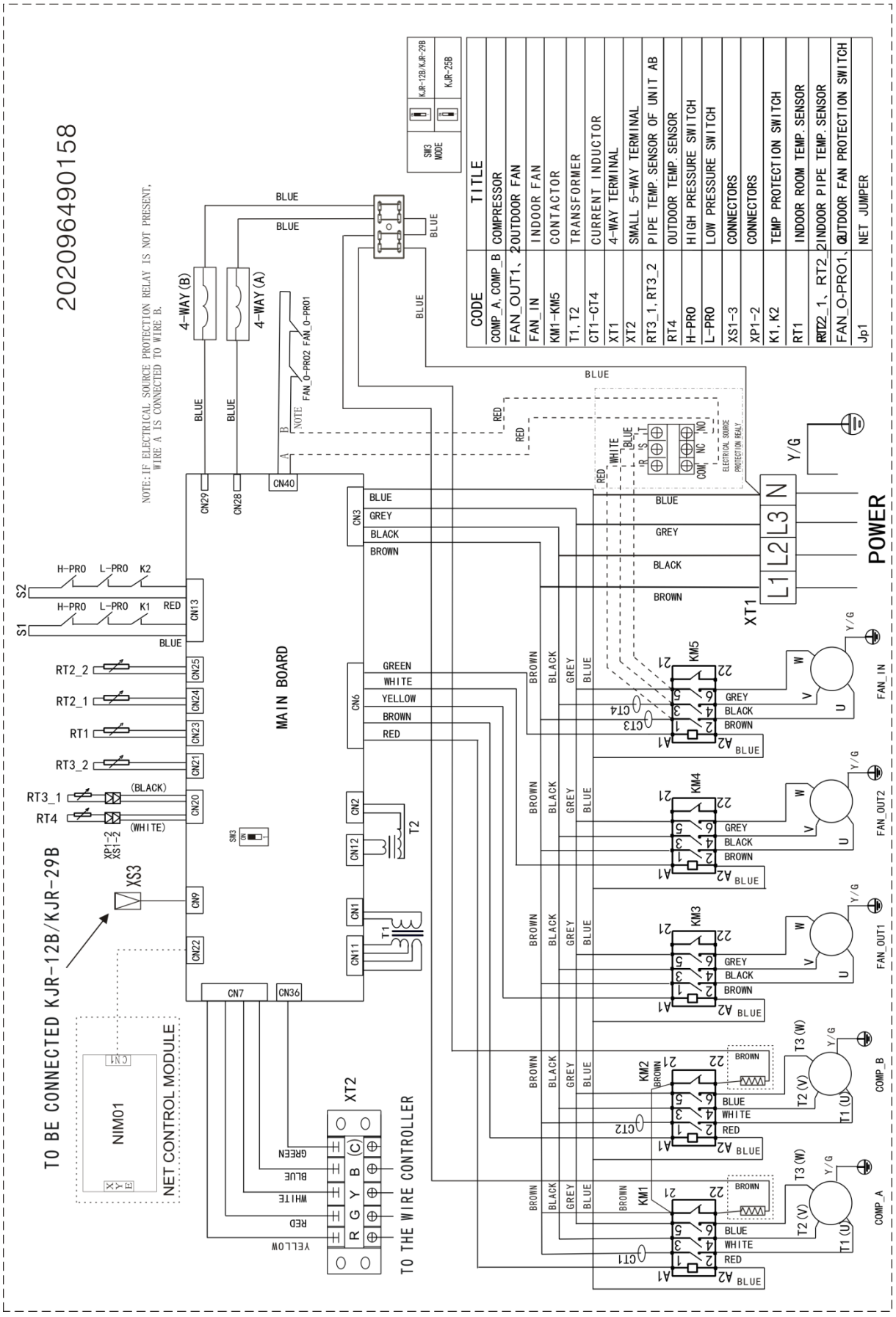

MRC-250HWN1-R(C), MRC-300HWN1-R(C):

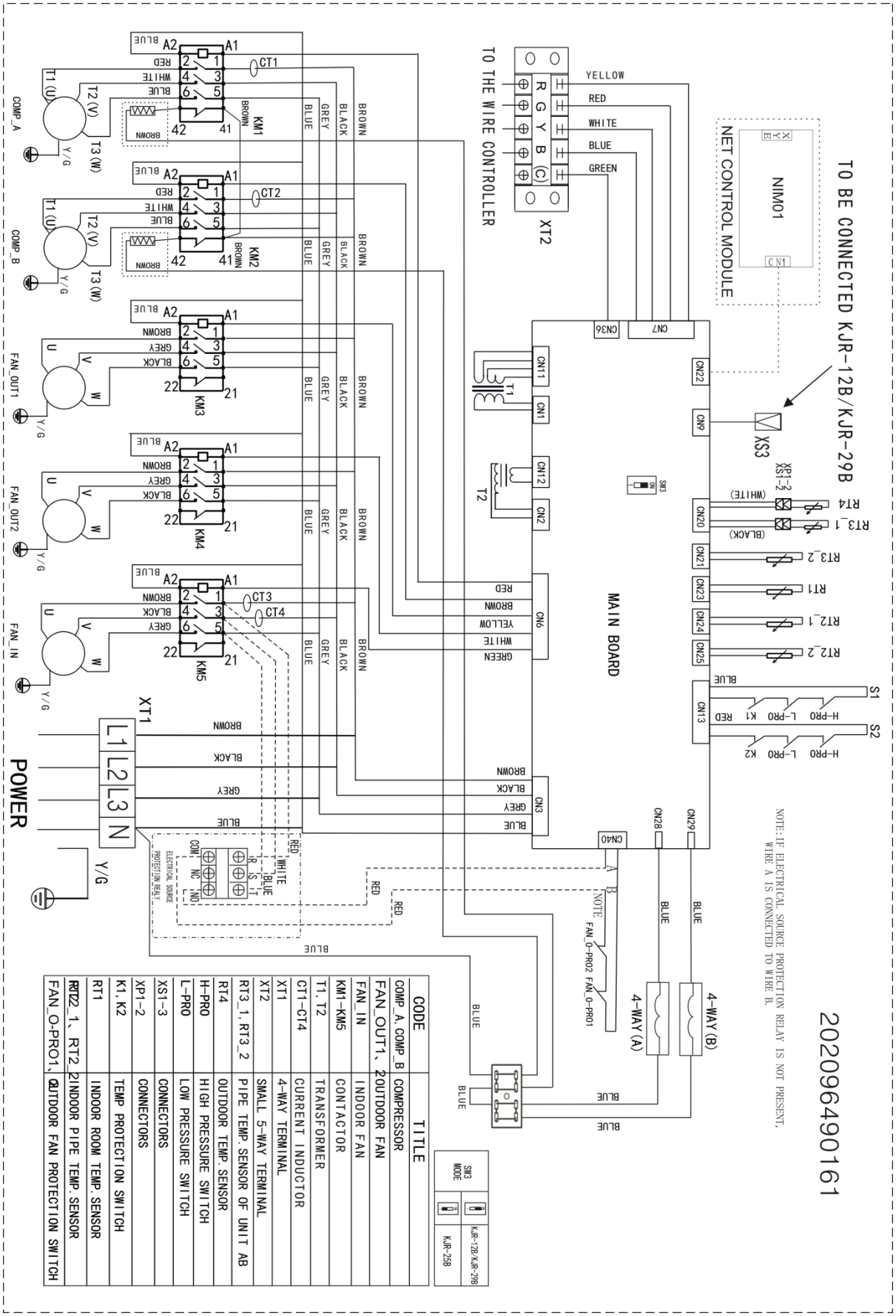

CODE	TITLE
COMP_A、COMP_B	COMPRESSOR
FAN_OUT1、FAN_OUT2	OUTDOOR FAN
FAN_IN	INDOOR FAN
KM1-KM5	CONTACTOR
T1、T2	TRANSFORMER
CT1-CT4	CURRENT INDUCTOR
XT1	4-WAY TERMINAL
XT2	SMALL 5-WAY TERMINAL
RT3_1、RT3_2	PIPE TEMP. SENSOR OF UNIT AB
RT4	OUTDOOR TEMP. SENSOR
H-PRO	HIGH PRESSURE SWITCH
L-PRO	LOW PRESSURE SWITCH
XS1-3	CONNECTORS
XP1-2	CONNECTORS
K1、K2	TEMP PROTECTION SWITCH
RT1	INDOOR ROOM TEMP. SENSOR
RT2_1、RT2_2	INDOOR PIPE TEMP. SENSOR
FAN_O-PRO1、FAN_O-PRO2	OUTDOOR FAN PROTECTION SWITCH

5. Performance data

MRC-062HWN1-R(C)

Cooling capacity:

Gross Cooling Capacity																		
Ambient DB(°C)		29.4									35							
Indoor	WB(°C)	16.1			19.4			22.8			16.1			19.4			22.8	
CFM	DB(°C)	TC	SC	PI	TC	SC	PI	TC	SC	PI	TC	SC	PI	TC	SC	PI	TC	SC	PI
2,000	23.9	65.4	57.1	5,615	75.8	42.6	6,171	79.0	26.7	7,560	62.1	54.5	5,931	68.0	41.2	6,189	78.4	25.8	7,970
	26.7	66.8	63.6	5,759	77.4	53.8	6,346	80.7	38.8	7,760	63.5	59.6	6,275	69.5	52.9	6,534	80.0	38.1	8,220
	29.4	68.2	67.8	6,012	79.0	64.8	6,783	82.4	48.1	8,110	64.8	61.6	6,706	71.0	64.6	6,970	81.7	48.3	8,728
	32.2	69.6	69.6	6,300	80.7	75.4	7,133	84.1	56.9	8,504	66.2	64.5	6,999	72.4	68.5	7,301	83.4	58.6	9,128
2,800	23.9	69.5	61.1	5,904	76.7	44.7	6,237	79.5	27.2	7,596	64.1	56.8	6,219	69.3	43.2	6,256	78.8	26.2	8,000
	26.7	70.9	66.9	6,048	78.4	57.0	6,412	81.2	38.5	7,796	65.5	62.1	6,564	75.0	56.1	6,600	80.5	38.9	8,250
	29.4	72.4	70.2	6,313	80.0	67.9	6,855	82.9	48.3	8,146	66.9	64.3	7,007	77.3	68.8	7,043	82.2	49.8	8,758
	32.2	74.0	72.7	6,607	81.7	77.1	7,205	84.6	59.1	8,540	68.4	67.8	7,307	78.5	72.9	7,375	83.9	61.0	9,158
3,600	23.9	71.2	65.0	6,025	77.4	45.9	6,285	79.7	27.6	7,608	66.1	59.2	6,340	72.9	45.3	6,453	79.1	26.7	8,024
	26.7	72.7	67.1	6,175	79.0	58.0	6,460	81.4	42.0	7,808	67.5	62.7	6,690	77.1	59.1	6,793	80.8	39.6	8,275
	29.4	74.2	70.0	6,440	80.7	70.2	6,904	83.1	49.2	8,158	69.0	66.3	7,132	78.6	72.4	7,242	82.5	51.1	8,782
	32.2	75.8	73.7	6,740	82.4	80.3	7,254	84.9	59.4	8,558	70.4	69.0	7,440	80.0	73.4	7,573	84.2	62.6	9,182

Notes:

1. All capacities are gross and have not considered indoor fan heat. To obtain net cooling capacity subtract indoor fan heat;

2. TC = Total Capacity (Unit: 1,000Btu/h); SC = Sensible Capacity (Unit: 1,000Btu/h).

MRC-062HWN1-R(C)

Cooling capacity: (Continued)

Gross Cooling Capacity																		
Ambient DB(°C)		40.6									46.1							
Indoor	WB(°C)	16.1			19.4			22.8			16.1			19.4			22.8	
CFM	DB(°C)	TC	SC	PI	TC	SC	PI	TC	SC	PI	TC	SC	PI	TC	SC	PI	TC	SC	PI
2,000	23.9	56.6	51.8	6,506	67.0	38.8	6,690	76.2	24.5	8,598	48.9	47.1	7,093	58.5	34.0	7,381	70.4	21.0	8,841
	26.7	57.8	53.4	6,735	68.5	50.6	6,934	77.8	37.0	8,878	50.0	48.3	7,337	59.8	46.1	7,650	72.0	32.8	9,135
	29.4	59.1	55.9	7,113	69.9	62.6	7,318	79.5	49.9	9,486	51.1	49.8	7,561	61.1	57.4	8,034	73.6	45.4	9,743
	32.2	60.3	57.5	7,407	71.4	68.6	7,662	81.1	60.6	9,880	52.2	51.6	7,855	62.5	61.5	8,377	75.2	58.2	10,143
2,800	23.9	58.6	55.8	6,645	68.6	41.0	6,805	76.2	24.5	8,592	50.5	45.4	7,208	60.0	36.3	7,489	66.4	21.5	8,552
	26.7	59.8	56.9	6,880	70.1	51.6	7,049	77.8	38.2	8,872	51.6	48.0	7,452	61.4	49.4	7,764	67.8	34.6	8,840
	29.4	61.1	60.2	7,257	71.6	67.5	7,438	79.4	51.1	9,474	52.7	50.8	7,682	62.7	59.9	8,148	69.3	47.3	9,441
	32.2	62.4	61.9	7,557	73.1	72.0	7,782	81.1	62.3	9,874	53.9	52.1	7,976	64.1	63.1	8,492	70.9	59.7	9,835
3,600	23.9	60.3	59.3	6,771	69.9	43.2	6,895	77.4	25.6	8,682	52.7	50.5	7,364	61.4	38.5	7,586	72.2	22.1	8,967
	26.7	61.6	60.3	7,006	71.4	57.6	7,145	79.0	39.8	8,962	53.8	52.1	7,614	62.7	53.0	7,861	73.8	36.2	9,267
	29.4	63.0	61.5	7,390	72.9	72.3	7,529	80.7	52.5	9,570	55.0	53.7	7,844	64.1	58.1	8,244	75.4	50.0	9,875
	32.2	64.3	63.6	7,690	74.5	73.7	7,879	82.4	64.1	9,970	56.3	55.5	8,144	65.5	65.2	8,594	77.0	63.2	10,275

Notes:

1. All capacities are gross and have not considered indoor fan heat. To obtain net cooling capacity subtract indoor fan heat;

2. TC = Total Capacity (Unit: 1,000Btu/h); SC = Sensible Capacity (Unit: 1,000Btu/h).

MRC-062HWN1-R(C)

Heating capacity:

Net Capacities (kW) @ 2,800CFM								
Outdoor Temp. (°C)	Peak net heating (kW) at indicated dry bulb (°C)				Peak total power input (kW) at indicated dry bulb (°C)			
70% RH	15	20	24	27	15	20	24	27
-9	14.2	13.7	13.4	12.9	5.6	5.9	6.1	6.3
-6	15.7	15.2	14.8	143	5.9	6.2	6.4	6.6
-3	17.4	16.9	16.4	15.9	6.2	6.5	6.7	6.9
0	19.3	18.8	18.2	17.7	6.6	6.8	7.1	7.3
3	22.8	22.1	21.4	20.8	6.9	7.2	7.4	7.7
7	26.8	26	25.2	24.5	7.3	7.5	7.8	8.1
9	28.7	27.8	27	26.2	7.4	8.2	8.7	9.2
12	30.4	29.5	28.6	27.7	7.7	8.6	9	9.6
15	32.2	31.3	30.3	29.4	7.8	8.8	9.2	9.8
18	34.1	33.1	32.1	31.2	8.1	8.9	9.5	10.1
21	36.2	35.1	34.1	33	8.2	9.1	9.6	10.1
24	38.3	37.2	36.1	35	8.4	9.2	10	10.3

Notes:

1. The values of heating capacity and power input are integrated to include the effects of defrost in the frost region.

MRC-075HWN1-R(C)

Cooling capacity:

Gross Cooling Capacity																			
Ambient DB(°C)		29.4									35								
Indoor	WB(°C)	16.1			19.4			22.8			16.1			19.4			22.8		
CFM	DB(°C)	TC	SC	PI	TC	SC	PI	TC	SC	PI	TC	SC	PI	TC	SC	PI	TC	SC	PI
2,100	23.9	77.6	67.8	7,013	89.9	50.7	7,460	93.7	31.9	8,494	73.7	64.7	7,576	80.7	49.0	7,883	92.9	30.8	8,931
	26.7	79.4	75.6	7,158	91.9	64.0	7,635	95.8	46.2	8,695	75.4	70.8	7,756	82.5	62.9	8,085	95.0	45.4	9,181
	29.4	81.1	80.6	7,413	93.9	77.1	8,046	97.9	57.3	9,045	77.1	73.3	8,016	84.4	76.9	8,422	97.1	57.6	9,657
	32.2	82.9	81.5	7,703	96.0	89.7	8,396	100.0	67.8	9,440	78.8	76.8	8,311	86.2	81.6	8,776	99.2	69.9	10,057
2,830	23.9	82.4	72.5	7,250	91.0	53.1	7,514	94.3	32.4	8,524	76.1	67.4	7,695	82.2	51.4	7,883	93.4	31.3	8,956
	26.7	84.2	79.5	7,395	93.0	67.8	7,689	96.4	45.9	8,724	77.8	73.8	7,875	89.0	66.6	7,900	95.5	46.4	9,206
	29.4	86.1	83.5	7,660	95.1	80.7	8,105	98.5	57.6	9,074	79.6	76.5	8,140	91.9	81.8	8,301	97.6	59.4	9,681
	32.2	88.0	86.5	7,956	97.2	91.7	8,455	100.6	70.5	9,469	81.4	80.7	8,440	93.4	86.7	8,636	99.7	72.7	10,082
3,800	23.9	84.4	77.1	7,349	91.8	54.6	7,554	94.5	32.9	8,534	78.4	70.3	7,808	86.5	53.8	7,964	93.8	31.9	8,975
	26.7	86.3	79.7	7,499	93.8	69.0	7,729	96.6	50.0	8,734	80.2	74.5	7,993	91.4	70.2	8,153	95.9	47.2	9,226
	29.4	88.2	83.2	7,764	95.9	83.5	8,145	98.7	58.6	9,084	82.0	78.8	8,259	93.4	86.1	8,375	98.0	60.9	9,701
	32.2	90.2	87.7	8,064	98.0	95.5	8,495	100.9	70.8	9,484	83.8	82.1	8,559	95.2	87.4	8,725	100.1	74.6	10,101

Notes:

1. All capacities are gross and have not considered indoor fan heat. To obtain net cooling capacity subtract indoor fan heat;

2. TC = Total Capacity (Unit: 1,000Btu/h); SC = Sensible Capacity (Unit: 1,000Btu/h).

MRC-075HWN1-R(C)

Cooling capacity: (Continued)

Gross Cooling Capacity																		
Ambient DB(°C)		40.6									46.1							
Indoor	WB(°C)	16.1			19.4			22.8			16.1			19.4			22.8	
CFM	DB(°C)	TC	SC	PI	TC	SC	PI	TC	SC	PI	TC	SC	PI	TC	SC	PI	TC	SC	PI
2,100	23.9	67.2	61.5	7,751	79.5	46.1	7,917	90.4	29.3	9,650	54.7	52.6	8,307	66.1	37.2	8,611	80.2	21.8	9,722
	26.7	68.7	63.5	7,981	81.3	60.2	8,162	92.4	44.1	9,930	56.1	54.1	8,553	67.7	51.6	8,881	82.1	35.8	10,016
	29.4	70.3	66.6	8,332	83.1	74.5	8,518	94.5	59.5	10,506	57.5	56.0	8,778	69.4	65.0	9,237	84.1	50.8	10,592
	32.2	71.9	68.6	8,627	85.0	81.7	8,863	96.5	72.2	10,901	59.0	58.3	9,073	71.1	69.9	9,582	86.1	66.1	10,992
2,830	23.9	69.5	66.3	7,864	81.4	48.8	8,011	90.3	29.2	9,645	56.6	50.6	8,401	67.9	39.9	8,700	75.4	22.4	9,484
	26.7	71.1	67.6	8,100	83.2	61.4	8,256	92.3	45.6	9,925	58.0	53.8	8,647	69.6	55.5	8,975	77.2	37.9	9,774
	29.4	72.7	71.6	8,450	85.1	80.3	8,617	94.3	60.9	10,496	59.5	57.2	8,877	71.3	67.9	9,331	79.1	53.1	10,345
	32.2	74.4	73.8	8,750	87.0	85.7	8,962	96.4	74.2	10,896	61.0	58.8	9,172	73.0	71.8	9,676	81.0	67.8	10,740
3,800	23.9	71.6	70.4	7,968	82.9	51.4	8,085	91.8	30.5	9,720	59.2	56.7	8,530	69.5	42.5	8,779	82.3	23.1	9,825
	26.7	73.2	71.7	8,203	84.8	68.5	8,335	93.8	47.4	10,000	60.7	58.6	8,780	71.2	59.7	9,054	84.3	39.9	10,125
	29.4	74.9	73.2	8,559	86.6	85.9	8,691	95.9	62.5	10,575	62.2	60.6	9,010	72.9	71.7	9,410	86.3	56.2	10,701
	32.2	76.6	75.8	8,859	88.6	87.7	9,041	98.0	76.3	10,975	63.8	62.9	9,310	74.7	74.3	9,760	88.3	72.0	11,101

Notes:

1. All capacities are gross and have not considered indoor fan heat. To obtain net cooling capacity subtract indoor fan heat;

2. TC = Total Capacity (Unit: 1,000Btu/h); SC = Sensible Capacity (Unit: 1,000Btu/h).

MRC-075HWN1-R(C)

Heating capacity:

Net Capacities (kW) @ 2,830CFM								
Outdoor Temp. (°C)	Peak net heating (kW) at indicated dry bulb (°C)				Peak total power input (kW) at indicated dry bulb (°C)			
70% RH	15	20	24	27	15	20	24	27
-9	17	16.5	16.4	16.4	7.2	7.9	8.3	8.9
-6	17.8	17.3	17.1	16.9	7.3	8	8.4	9
-3	18.8	18.5	18.4	18.1	7.4	8.1	8.6	9.2
0	20.3	20	19.7	19.4	7.5	8.2	8.7	9.3
3	23.3	23.1	22.7	22.4	7.6	8.4	8.9	9.4
7	30.3	30	29.6	29.2	7.9	8.9	9.2	9.7
9	30.5	30.2	29.9	29.6	8.2	9.1	9.6	10.2
12	32.4	33.5	33.4	33.1	8.5	9.5	10	10.6
15	35	34.4	34.2	33.8	8.7	9.7	10.2	10.8
18	37.1	36.4	36	35.7	9	9.9	10.5	11.1
21	39.8	38.9	38.4	37.9	9.1	10.1	10.6	11.1
24	42	40.9	40.2	39.8	9.3	10.2	11	11.4

Notes:

1. The values of heating capacity and power input are integrated to include the effects of defrost in the frost region.

MRC-085HWN1-R(C)

Cooling capacity:

Gross Cooling Capacity																		
Ambient DB(°C)		29.4									35							
Indoor	WB(°C)	16.1			19.4			22.8			16.1			19.4			22.8	
CFM	DB(°C)	TC	SC	PI	TC	SC	PI	TC	SC	PI	TC	SC	PI	TC	SC	PI	TC	SC	PI
2,450	23.9	89.1	77.0	8,400	99.8	56.7	8,825	103.6	34.9	9,516	82.1	73.5	8,742	95.7	54.7	8,937	102.7	33.7	10,074
	26.7	91.0	78.7	8,547	102.0	73.0	9,000	106.0	49.7	9,716	84.0	75.2	8,924	97.9	71.1	9,101	104.9	50.2	10,321
	29.4	93.1	80.5	8,809	104.3	87.0	9,248	108.3	62.4	10,066	85.9	76.8	9,186	100.1	87.3	9,359	107.3	64.1	10,632
	32.2	95.2	82.3	9,106	106.6	101	9,598	110.6	76.0	10,463	87.8	78.6	9,479	102.3	100	9,672	109.7	78.1	11,035
3,500	23.9	91.5	82.5	8,498	100.8	58.8	8,866	104.0	35.4	9,530	84.8	79.0	8,847	99.0	57.7	9,065	102.9	34.5	10,084
	26.7	93.6	84.4	8,648	103.0	74.9	9,041	106.3	50.5	9,730	86.7	80.8	9,029	103.0	75.4	9,300	105.2	51.3	10,331
	29.4	95.7	86.3	8,910	105.3	90.9	9,288	108.6	63.8	10,080	88.7	82.7	9,294	104.3	91.9	9,528	107.5	66.5	10,642
	32.2	97.8	88.2	9,210	107.6	104	9,638	111.0	77.2	10,480	90.6	84.6	9,590	105.8	101	9,810	109.9	81.6	11,046
4,200	23.9	93.9	87.6	8,589	101.7	60.9	8,903	104.2	36.0	9,540	87.3	84.3	8,948	100.1	60.3	9,109	103.5	34.7	10,108
	26.7	95.9	89.6	8,740	104.0	77.5	9,078	106.6	55.9	9,740	89.3	86.2	9,133	103.8	79.6	9,334	105.9	52.0	10,358
	29.4	98.1	91.6	9,005	106.3	94.1	9,329	108.9	64.8	10,090	91.3	88.2	9,398	104.5	97.3	9,535	108.2	67.7	10,669
	32.2	100.2	93.6	9,305	108.6	106	9,679	111.3	78.6	10,490	93.4	90.2	9,698	107.7	104	9,885	110.5	84.0	11,069

Notes:

1. All capacities are gross and have not considered indoor fan heat. To obtain net cooling capacity subtract indoor fan heat;

2. TC = Total Capacity (Unit: 1,000Btu/h); SC = Sensible Capacity (Unit: 1,000Btu/h).

MRC-085HWN1-R(C),

Cooling capacity: (Continued)

Gross Cooling Capacity																		
Ambient DB(°C)		40.6									46.1							
Indoor	WB(°C)	16.1			19.4			22.8			16.1			19.4			22.8	
CFM	DB(°C)	TC	SC	PI	TC	SC	PI	TC	SC	PI	TC	SC	PI	TC	SC	PI	TC	SC	PI
2,450	23.9	75.0	69.9	9,079	88.5	51.9	9,313	100.1	32.0	10,689	62.9	61.4	9,412	75.7	43.3	9,884	91.1	25.1	10,864
	26.7	76.7	71.6	9,311	90.5	68.2	9,560	102.4	48.3	10,969	64.4	63.0	9,659	77.5	60.3	10,156	93.2	41.5	11,165
	29.4	78.5	73.2	9,498	92.6	85.0	9,751	104.6	63.6	11,377	66.1	64.5	9,886	79.4	76.6	10,343	95.4	57.8	11,572
	32.2	80.3	74.9	9,795	94.7	93.4	10,097	106.9	78.6	11,777	67.7	66.2	10,182	81.3	78.4	10,690	97.6	73.8	11,972
3,500	23.9	77.8	75.6	9,190	90.8	55.1	9,401	100.8	32.7	10,716	65.4	62.8	9,510	77.4	46.6	9,948	91.8	25.7	10,895
	26.7	79.6	77.3	9,426	92.8	73.0	9,651	103.0	50.3	10,996	67.0	64.3	9,760	80.7	64.6	10,280	94.0	43.9	11,195
	29.4	81.5	79.1	9,616	94.9	91.7	9,842	105.3	67.3	11,404	68.6	66.0	9,987	81.2	79.4	10,410	96.2	61.4	11,606
	32.2	83.3	80.9	9,913	97.0	95.4	10,188	107.6	83.2	11,804	70.4	67.6	10,287	83.1	81.3	10,757.	98.5	78.4	12,006
4,200	23.9	79.5	74.1	9,258	92.2	57.6	9,458	101.3	33.2	10,736	68.0	66.2	9,615	79.4	49.6	10,029	92.4	26.4	10,918
	26.7	81.4	75.8	9,493	94.3	78.4	9,708	103.6	52.0	11,016	69.7	67.9	9,865	81.3	69.7	10,304	94.6	46.3	11,218
	29.4	83.2	77.5	9,684	96.4	93.2	9,899	105.9	68.7	11,427	71.4	69.5	10,095	83.3	81.1	10,495	96.8	64.4	11,630
	32.2	85.1	79.2	9,984	98.5	95.1	10,249	108.2	85.8	11,827	73.1	71.2	10,395	85.3	83.9	10,845	99.1	82.9	12,030

Notes:

1. All capacities are gross and have not considered indoor fan heat. To obtain net cooling capacity subtract indoor fan heat;

2. TC = Total Capacity (Unit: 1,000Btu/h); SC = Sensible Capacity (Unit: 1,000Btu/h).

MRC-085HWN1-R(C)

Heating capacity:

Net Capacities (kW) @ 3,500CFM								
Outdoor Temp. (°C)	Peak net heating (kW) at indicated dry bulb (°C)				Peak total power input (kW) at indicated dry bulb (°C)			
70% RH	15	20	24	27	15	20	24	27
-9	21.4	20.8	20.6	20.6	9.3	9.5	10	10.5
-6	22.4	21.8	21.6	21.3	9.4	9.7	10.3	10.7
-3	23.7	23.4	23.2	22.8	9.5	10	10.5	10.9
0	25.5	25.2	24.8	24.5	9.6	10.2	10.7	11.2
3	29.4	29.1	28.7	28.3	9.8	10.4	10.9	11.4
7	35.4	35	33	32.8	10.1	10.6	11.1	11.6
9	38.5	38	37.7	37.3	10.3	10.8	11.3	11.9
12	40.9	42.3	42.1	41.7	10.5	11	11.5	12.1
15	44.1	43.4	43.1	42.7	10.7	11.3	11.8	12.5
18	46.7	45.9	45.4	45	10.9	11.5	12.1	12.7
21	50.1	49.1	48.4	47.8	11.3	11.8	12.3	12.9
24	53	51.6	50.7	50.1	11.5	12	12.6	13.2

Notes:

1. The values of heating capacity and power input are integrated to include the effects of defrost in the frost region.

MRC-100HWN1-R(C)

Cooling capacity:

Gross Cooling Capacity																			
Ambient DB(°C)		29.4									35								
Indoor	WB(°C)	16.1			19.4			22.8			16.1			19.4			22.8		
CFM	DB(°C)	TC	SC	PI	TC	SC	PI	TC	SC	PI	TC	SC	PI	TC	SC	PI	TC	SC	PI
3,300	23.9	106.6	92.5	9,375	119.1	68.9	10,455	123.6	43.4	10,837	98.5	88.4	8,753	114.4	66.5	10,317	122.5	42.0	10,829
	26.7	109.0	94.6	9,686	121.8	87.9	10,791	126.4	60.8	11,188	100.8	90.5	9,074	117.0	85.7	10,471	125.2	61.3	11,179
	29.4	111.4	96.7	10,043	124.4	104	11,165	129.1	75.6	11,571	103.0	92.4	9,500	119.5	105	10,923	127.9	77.5	11,648
	32.2	113.7	98.7	10,558	127.0	121	11,698	131.7	91.3	12,112	105.1	94.4	10,014	122.0	119	11,534	130.6	93.8	12,198
3,900	23.9	109.6	95.5	9,634	122.1	71.9	10,714	126.6	46.4	11,096	101.5	91.4	9,012	117.4	69.5	10,576	125.5	45.0	11,088
	26.7	112.0	97.6	9,945	124.8	90.9	11,050	129.4	63.8	11,446	103.8	93.5	9,332	120.0	88.7	10,710	128.2	64.3	11,438
	29.4	114.4	99.7	10,302	127.4	107	11,424	132.1	78.6	11,829	106.0	95.4	9,759	122.5	108	11,182	130.9	80.5	11,907
	32.2	116.7	102	10,817	130.0	124	11,957	134.7	94.3	12,371	108.1	97.4	10,273	125.0	122	11,793	133.6	96.8	12,457
4,600	23.9	112.5	102	9,884	123.3	74.3	10,818	127.0	47.0	11,131	104.6	97.9	9,280	121.2	73.0	10,904	125.8	45.9	11,113
	26.7	115.0	104	10,204	126.0	93.2	11,153	129.8	64.7	11,481	106.9	100	9,600	125.9	93.7	11,239	128.5	65.6	11,464
	29.4	117.4	106	10,561	128.6	112	11,527	132.5	80.2	11,864	109.2	102	10,035	127.5	113	11,614	131.2	83.3	11,933
	32.2	119.8	109	11,084	131.2	128	12,060	135.2	95.7	12,414	111.4	104	10,558	129.1	123	12,147	133.9	101	18,483

Notes:

1. All capacities are gross and have not considered indoor fan heat. To obtain net cooling capacity subtract indoor fan heat;

2. TC = Total Capacity (Unit: 1,000Btu/h); SC = Sensible Capacity (Unit: 1,000Btu/h).

MRC-100HWN1-R(C)

Cooling capacity: (Continued)

Gross Cooling Capacity																		
Ambient DB(°C)		40.6									46.1							
Indoor	WB(°C)	16.1			19.4			22.8			16.1			19.4			22.8	
CFM	DB(°C)	TC	SC	PI	TC	SC	PI	TC	SC	PI	TC	SC	PI	TC	SC	PI	TC	SC	PI
3,300	23.9	90.2	84.3	10,065	106.0	63.3	11,439	119.5	40.0	12,606	80.0	78.3	10,694	95.0	57.2	12,146	112.9	35.9	13,555
	26.7	92.3	86.3	10,377	108.4	82.3	11,766	122.2	59.1	12,956	81.9	80.2	11,006	97.2	77.1	12,326	115.5	55.2	13,905
	29.4	94.3	88.2	10,716	110.8	102	12,140	124.8	77.0	13,348	83.8	82.0	11,501	99.4	96.1	12,847	118.0	74.1	14,452
	32.2	96.3	90.0	11,239	113.1	112	12,673	127.4	94.3	13,898	85.6	83.8	12,015	101.5	98.1	13,380	120.5	92.7	15,002
3,900	23.9	93.2	87.3	10,324	109.0	66.3	11,698	122.5	43.0	12,865	83.0	81.3	10,953	98.0	60.2	12,405	115.9	38.9	13,814
	26.7	95.3	89.3	10,635	111.4	85.3	12,025	125.2	62.1	13,215	84.9	83.2	11,265	100.2	80.1	12,585	118.5	58.2	14,164
	29.4	97.3	91.2	10,975	113.8	105	12,399	127.8	80.0	13,607	86.8	85.0	11,760	102.4	99.1	13,106	121.0	77.1	14,711
	32.2	99.3	93.0	11,498	116.1	115	12,932	130.4	97.3	14,157	88.6	86.8	12,274	104.5	101	13,639	123.5	95.7	15,261
4,600	23.9	96.5	93.9	10,609	111.6	70.0	11,922	123.3	43.9	12,934	85.9	82.9	11,203	99.9	64.0	12,569	116.8	39.6	13,891
	26.7	98.7	96.0	10,929	114.1	91.0	12,258	126.0	64.5	13,284	87.9	84.8	11,523	103.9	85.1	12,904	119.4	61.0	14,241
	29.4	100.8	98.0	11,277	116.5	113	12,632	128.6	84.3	13,676	89.8	86.7	12,019	104.4	102	13,278	122.0	81.3	14,797
	32.2	102.8	100	11,800	118.8	117	13,165	131.2	103	14,226	91.7	88.5	12,542	106.5	104	13,811	124.5	101	15,347

Notes:

1. All capacities are gross and have not considered indoor fan heat. To obtain net cooling capacity subtract indoor fan heat;

2. TC = Total Capacity (Unit: 1,000Btu/h); SC = Sensible Capacity (Unit: 1,000Btu/h).

MRC-100HWN1-R(C)

Heating capacity:

Net Capacities (kW) @ 3,900CFM								
Outdoor Temp. (°C)	Peak net heating (kW) at indicated dry bulb (°C)				Peak total power input (kW) at indicated dry bulb (°C)			
70% RH	15	20	24	27	15	20	24	27
-9	25.6	25	24.8	24.8	10.5	11.4	11.9	12.7
-6	26.7	26	25.8	25.5	10.6	11.5	12.1	12.9
-3	28.1	27.7	27.5	27.1	10.7	11.6	12.3	13.1
0	30	29.6	29.2	28.9	10.8	11.8	12.5	13.2
3	34.1	33.8	33.3	32.9	11	12	12.7	13.4
7	40.8	40	39.3	38.7	11.4	11.9	12.9	13.8
9	43.7	43.2	42.8	42.4	11.8	13	13.7	14.5
12	46.2	47.7	47.5	47.1	12.2	13.5	14.2	15
15	49.6	48.9	48.6	48.1	12.5	13.8	14.5	15.3
18	52.4	51.5	51	50.6	12.8	14.1	14.9	15.6
21	56	54.9	54.2	53.5	13	14.3	15	15.7
24	59	57.5	56.6	56	13.3	14.5	15.5	16

Notes:

1. The values of heating capacity and power input are integrated to include the effects of defrost in the frost region.

MRC-125HWN1-R(C)

Cooling capacity:

Gross Cooling Capacity																			
Ambient DB(°C)		29.4									35								
Indoor	WB(°C)	16.1			19.4			22.8			16.1			19.4			22.8		
CFM	DB(°C)	TC	SC	PI	TC	SC	PI	TC	SC	PI	TC	SC	PI	TC	SC	PI	TC	SC	PI
3,500	23.9	130.8	114	10,392	145.8	85.5	11,818	151.2	54.9	12,325	121.1	109	10,484	140.1	82.7	12,500	149.9	53.3	13,222
	26.7	133.4	116	10,701	148.8	108	12,153	154.3	75.6	12,675	123.6	111	10,792	143.0	106	12,631	152.9	76.2	13,561
	29.4	136.3	119	11,152	151.9	128	12,627	157.5	93.3	13,160	126.2	114	11,436	146.0	128	13,308	156.1	95.6	14,261
	32.2	139.0	121	11,663	155.0	148	13,160	160.6	112	13,699	128.7	116	11,936	149.0	146	13,716	159.3	115	14,823
5,500	23.9	134.3	122	10,721	147.2	88.4	11,955	151.7	55.7	12,371	124.8	117	10,835	144.7	86.9	12,931	150.2	54.3	13,256
	26.7	137.0	124	11,041	150.2	111	12,290	154.8	76.7	12,721	127.3	119	11,144	150.0	111	13,300	153.2	77.7	13,595
	29.4	139.9	127	11,492	153.3	133	12,763	158.0	95.2	13,206	130.0	122	11,799	152.0	135	13,876	156.4	99.0	14,295
	32.2	142.8	129	12,015	156.4	152	13,296	161.2	114	13,756	132.7	124	12,311	153.9	147	14,182	159.7	120	14,857
6,400	23.9	137.5	129	11,028	148.5	91.3	12,079	152.0	56.5	12,405	128.4	124	11,176	146.3	90.6	13,079	151.1	54.7	13,336
	26.7	140.3	131	11,348	151.5	115	12,414	155.1	84.2	12,755	131.0	127	11,496	151.3	117	13414	154.2	78.8	13,686
	29.4	143.2	134	11,810	154.8	138	12,899	158.4	96.7	13,240	133.8	129	12,151	152.2	142	13,898	157.4	101	14,386
	32.2	146.1	137	12,333	157.9	154	13,432	161.6	116	13,790	136.5	132	12,674	156.6	152	14,431	160.5	123	14,936

Notes:

1. All capacities are gross and have not considered indoor fan heat. To obtain net cooling capacity subtract indoor fan heat;

2. TC = Total Capacity (Unit: 1,000Btu/h); SC = Sensible Capacity (Unit: 1,000Btu/h).

MRC-125HWN1-R(C)

Cooling capacity: (Continued)

Gross Cooling Capacity																			
Ambient DB(°C)		40.6									46.1								
Indoor	WB(°C)	16.1			19.4			22.8			16.1			19.4			22.8		
CFM	DB(°C)	TC	SC	PI	TC	SC	PI	TC	SC	PI	TC	SC	PI	TC	SC	PI	TC	SC	PI
3,500	23.9	111.1	104	12,036	130.1	78.8	13,848	146.3	50.9	15,388	100.6	98.5	13,611	118.6	73.2	15,332	140.0	47.6	17,382
	26.7	113.4	106	12,345	132.7	101	14,172	149.3	73.5	15,738	102.6	101	13,919	121.0	96.8	15,656	142.9	70.6	17,732
	29.4	115.8	108	12,784	135.6	125	14,657	152.4	95.0	16,245	104.9	103	14,359	123.6	120	16,129	145.9	93.2	18,240
	32.2	118.2	111	13,296	138.3	137	15,178	155.5	116	16,795	107.0	105	14,870	126.1	122	16,651	148.9	116	18,790
5,500	23.9	115.1	112	12,411	133.2	83.3	14,143	147.2	51.9	15,479	104.0	100	13,940	120.8	77.8	15,548	141.1	48.5	17,484
	26.7	117.5	114	12,731	135.9	108	14,478	150.2	76.4	15,829	106.2	103	14,260	125.4	103	16,075	144.0	73.9	17,834
	29.4	120.0	117	13,181	138.8	134	14,963	153.3	100	16,336	108.5	105	14,699	126.0	124	16,336	147.1	98.3	18,353
	32.2	122.4	119	13,693	141.6	139	15,485	156.4	122	16,886	110.7	107	15,222	128.5	126	16,878	150.1	122	18,903
6,400	23.9	117.5	110	12,638	135.2	86.7	14,336	147.9	52.5	15,547	107.8	105	14,292	123.7	82.0	15,820	142.0	49.4	17,564
	26.7	119.9	112	12,958	138.0	116	14,671	150.9	78.7	15,897	109.9	107	14,612	126.2	110	16,155	144.8	77.2	17,914
	29.4	122.4	114	13,408	140.9	136	15,156	154.2	102	16,416	112.3	110	15,062	129.0	126	16,640	147.9	103	18,432
	32.2	124.9	117	13,931	143.7	139	15,689	157.3	126	16,966	114.6	112	15,585	131.6	130	17,173	150.9	128	18,982

Notes:

1. All capacities are gross and have not considered indoor fan heat. To obtain net cooling capacity subtract indoor fan heat;

2. TC = Total Capacity (Unit: 1,000Btu/h); SC = Sensible Capacity (Unit: 1,000Btu/h).

MRC-125HWN1-R(C)

Heating capacity:

Net Capacities (kW) @ 5,500CFM								
Outdoor Temp. (°C) 70% RH	Peak net heating (kW) at indicated dry bulb (°C)				Peak total power input (kW) at indicated dry bulb (°C)			
	15	20	24	27	15	20	24	27
-9	30.6	30	29.8	29.8	11.8	12.7	13.2	14
-6	31.7	31	30.8	30.5	11.9	12.8	13.4	14.2
-3	33.1	32.7	32.5	32.1	12	12.9	13.6	14.4
0	35	34.6	34.2	33.9	12.1	13.1	13.8	14.5
3	39.1	38.8	38.3	37.9	12.3	13.3	14	14.7
7	45.8	45	44.3	43.7	12.7	13.2	14.2	15.1
9	48.7	48.2	47.8	47.4	13.1	14.3	15	15.8
12	51.2	52.7	52.5	52.1	13.5	14.8	15.5	16.3
15	54.6	53.9	53.6	53.1	13.8	15.1	15.8	16.6
18	57.4	56.5	56	55.6	14.1	15.4	16.2	16.9
21	61	59.9	59.2	58.5	14.3	15.6	16.3	17
24	64	62.5	61.6	61	14.6	15.8	16.8	17.3

Notes:

1. The values of heating capacity and power input are integrated to include the effects of defrost in the frost region.

MRC-150HWN1-R(C)

Cooling capacity:

Gross Cooling Capacity																		
Ambient DB(°C)		29.4									35							
Indoor	WB(°C)	16.1			19.4			22.8			16.1			19.4			22.8	
CFM	DB(°C)	TC	SC	PI	TC	SC	PI	TC	SC	PI	TC	SC	PI	TC	SC	PI	TC	SC	PI
5,500	23.9	163.5	131	15,042	183.2	105	15,388	193.5	72.1	15,888	153.3	125	15,898	171.6	99.8	16,271	188.7	68.9	16,771
	26.7	165.6	156	15,322	185.5	128	15,668	197.3	96.8	16,168	157.1	150	16,148	174.2	123	16,551	191.1	93.1	17,051
	29.4	173.0	166	16,002	187.7	150	16,299	199.9	117	16,799	164.6	160	16,679	176.7	146	16,844	193.6	115	17,344
	32.2	182.9	176	16,225	190.4	173	16,522	202.4	137	17,022	175.6	170	17,202	180.4	169	17,367	196.3	135	17,867
7,000	23.9	167.9	139	15,192	188.6	109	15,538	195.7	73.5	16,038	155.2	133	16,048	178.9	104	16,421	190.1	70.4	16,921
	26.7	171.6	166	15,472	190.0	133	15,818	198.5	99.0	16,318	162.0	157	16,298	180.0	129	16,701	192.2	96.3	17,201
	29.4	179.1	174	16,152	191.2	157	16,449	202.3	120	16,949	171.8	167	16,829	182.8	154	16,994	195.3	118	17,494
	32.2	188.9	183	16,375	192.6	180	16,672	204.7	139	17,172	181.6	176	17,352	184.1	179	17,517	198.7	140	18,017
7,800	23.9	169.8	146	15,492	190.9	111	15,838	198.2	74.8	16,338	160.7	140	16,348	185.0	128	16,721	191.8	71.7	17,221
	26.7	174.2	167	15,772	192.5	166	16,118	201.0	99.9	16,618	164.5	160	16,598	187.3	164	17,001	194.3	97.9	17,501
	29.4	185.2	178	16,452	193.7	172	16,749	203.4	122	17,249	176.7	171	17,129	187.8	171	17,294	196.9	121	17,794
	32.2	193.8	186	16,675	195.3	188	16,972	206.0	144	17,472	186.5	181	17,652	188.9	187	17,817	198.2	144	18,317

Notes:

1. All capacities are gross and have not considered indoor fan heat. To obtain net cooling capacity subtract indoor fan heat;

2. TC = Total Capacity (Unit: 1,000Btu/h); SC = Sensible Capacity (Unit: 1,000Btu/h).

MRC-150HWN1-R(C)

Cooling capacity: (Continued)

Gross Cooling Capacity																			
Ambient DB(°C)		40.6									46.1								
Indoor	WB(°C)	16.1			19.4			22.8			16.1			19.4			22.8		
CFM	DB(°C)	TC	SC	PI	TC	SC	PI	TC	SC	PI	TC	SC	PI	TC	SC	PI	TC	SC	PI
5,500	23.9	142.6	120	16,611	163.5	94.5	17,014	185.6	65.5	17,514	117.6	102	17,212	141.0	85.6	18,401	160.6	49.3	18,901
	26.7	146.4	141	16,841	166.1	118	17,144	187.0	89.2	17,644	122.6	119	17,697	143.5	101	18,531	163.2	72.9	19,031
	29.4	153.9	148	17,074	169.8	141	17,637	188.3	112	18,137	135.0	131	18,182	144.8	124	19,224	165.8	96.3	19,724
	32.2	166.3	160	17,794	171.2	166	18,360	189.6	133	18,860	147.4	143	19,160	148.4	147	19,974	167.1	119	20,474
7,000	23.9	147.5	128	16,761	164.7	109	17,164	188.1	66.9	17,664	121.3	109	17,362	142.2	90.5	18,551	165.6	50.7	19,051
	26.7	151.3	145	16,991	168.5	124	17,294	189.4	92.3	17,794	128.8	123	17,847	146.0	107	18,681	168.1	77.1	19,181
	29.4	163.7	157	17,221	173.5	150	17,787	190.8	116	18,287	141.2	135	18,332	148.5	133	19,374	169.4	101	19,874
	32.2	171.2	164	17,944	176.1	171	18,510	193.3	139	19,010	153.6	147	19,310	151.1	151	20,124	170.8	124	20,624
7,800	23.9	150.0	135	17,061	173.3	103	17,464	190.6	68.2	17,964	125.0	115	17,662	150.8	104	18,851	169.2	53.6	19,351
	26.7	156.2	152	17,291	175.9	130	17,594	191.9	95.3	18,094	127.7	124	18,147	153.4	121	18,981	170.6	79.6	19,481
	29.4	169.8	165	17,521	178.5	157	18,087	193.2	119	18,587	138.3	134	18,632	157.1	147	19,674	171.9	106	20,174
	32.2	178.8	173	18,244	181.0	176	18,810	194.5	143	19,310	159.7	155	19,610	161.5	165	20,424	173.2	131	20,924

Notes:

1. All capacities are gross and have not considered indoor fan heat. To obtain net cooling capacity subtract indoor fan heat;

2. TC = Total Capacity (Unit: 1,000Btu/h); SC = Sensible Capacity (Unit: 1,000Btu/h).

MRC-150HWN1-R(C)

Heating capacity:

Net Capacities (kW) @ 5,500CFM								
Outdoor Temp. (°C)	Peak net heating (kW) at indicated dry bulb (°C)				Peak total power input (kW) at indicated dry bulb (°C)			
70% RH	15	20	24	27	15	20	24	27
-9	33.9	33	32.7	32.7	14	15.3	16.1	17.3
-6	35.6	34.5	34.2	33.8	14.1	15.5	16.4	17.6
-3	37.7	37.1	36.8	36.2	14.3	15.6	16.7	17.9
0	40.5	39.9	39.3	38.9	14.4	15.9	17	18
3	46.7	46.2	45.5	44.9	14.7	16.2	17.3	18.3
7	56.7	56	54.3	53.7	15.3	17.2	17.9	18.9
9	61.1	60.3	59.7	59.1	15.9	17.7	18.8	20
12	64.8	67.1	66.8	66.2	16.5	18.5	19.5	20.7
15	69.9	68.9	68.4	67.7	17	18.9	20	21.2
18	74.1	72.8	72	71.4	17.4	19.4	20.6	21.6
21	79.5	77.9	76.8	75.8	17.7	19.7	20.7	21.8
24	84	81.8	80.4	79.5	18.2	20	21.5	22.2

Notes:

1. The values of heating capacity and power input are integrated to include the effects of defrost in the frost region.

MRC-175HWN1-R(C)

Cooling capacity:

Gross Cooling Capacity																			
Ambient DB(°C)		29.4									35								
Indoor	WB(°C)	16.1			19.4			22.8			16.1			19.4			22.8		
CFM	DB(°C)	TC	SC	PI	TC	SC	PI	TC	SC	PI	TC	SC	PI	TC	SC	PI	TC	SC	PI
6,000	23.9	190.7	154	13,978	213.3	123	16,252	225.1	85.9	17,369	179.0	147	15,724	200.0	118	17,998	219.6	82.2	19,115
	26.7	193.1	182	14,237	215.9	150	16,511	229.4	114	17,629	183.3	175	15,983	202.9	144	18,258	222.3	110	19,375
	29.4	201.6	194	16,404	218.4	175	18,679	232.4	138	19,546	191.9	186	17,901	205.8	171	20,175	225.2	135	21,092
	32.2	212.8	204	16,690	221.4	202	18,964	235.2	160	19,881	204.4	198	18,236	209.9	197	20,510	228.2	158	21,477
7,600	23.9	195.8	159	14,868	218.4	128	17,142	230.2	91.0	18,209	184.1	152	16,564	205.1	123	18,838	224.7	87.3	19,906
	26.7	198.2	187	15,131	221.0	155	17,405	234.5	119	18,472	188.4	180	16,827	208.0	149	19,101	227.4	115	20,168
	29.4	206.7	199	16,890	223.5	180	19,164	237.5	143	20,031	197.0	191	18,386	210.9	176	20,660	230.3	140	21,577
	32.2	217.9	209	17,175	226.5	207	19,449	240.3	165	20,317	209.5	203	18,671	215.0	202	20,946	233.3	163	21,863
9,000	23.9	200.8	167	15,869	224.6	134	18,143	232.7	92.6	19,160	186.3	160	17,515	213.5	128	19,789	226.3	89.0	20,806
	26.7	205.1	198	16,134	226.2	161	18,408	235.9	122	19,426	194.1	188	17,780	218.0	160	20,055	228.7	119	21,072
	29.4	213.7	208	17,416	227.5	189	19,640	240.3	146	20,607	205.3	199	18,912	220.5	187	21,136	232.2	144	22,103
	32.2	224.8	218	17,701	229.0	215	19,925	242.9	167	20,892	216.4	210	19,197	221.6	215	21,421	236.0	169	22,388

Notes:

1. All capacities are gross and have not considered indoor fan heat. To obtain net cooling capacity subtract indoor fan heat;

2. TC = Total Capacity (Unit: 1,000Btu/h); SC = Sensible Capacity (Unit: 1,000Btu/h).

MRC-175HWN1-R(C)

Cooling capacity: (Continued)

Gross Cooling Capacity																			
Ambient DB(°C)		40.6									46.1								
Indoor	WB(°C)	16.1			19.4			22.8			16.1			19.4			22.8		
CFM	DB(°C)	TC	SC	PI	TC	SC	PI	TC	SC	PI	TC	SC	PI	TC	SC	PI	TC	SC	PI
6,000	23.9	166.7	140	17,470	190.7	112	19,744	216.0	78.3	22,124	146.3	128	19,500	173.2	110	21,634	195.6	68.0	23,888
	26.7	171.1	164	17,730	193.7	139	20,004	217.6	106	22,384	152.0	147	19,760	176.0	127	21,893	198.6	95.1	24,148
	29.4	179.7	173	19,447	197.9	165	21,671	219.1	131	23,923	166.2	161	21,299	177.5	154	23,383	201.6	122	25,587
	32.2	193.8	186	19,832	199.4	193	22,056	220.5	156	24,359	180.4	175	21,735	180.4	180	23,818	202.9	148	26,073
7,600	23.9	171.8	145	18,260	195.8	117	20,535	221.1	83.4	22,865	151.4	133	20,241	178.3	115	22,374	200.7	73.1	24,579
	26.7	176.2	169	18,523	198.8	144	20,797	222.7	111	23,128	157.1	152	20,503	181.1	132	22,637	203.7	100	24,841
	29.4	184.8	178	19,932	203.0	170	22,156	224.2	137	24,409	171.3	166	21,784	182.6	159	23,868	206.7	127	26,072
	32.2	198.9	191	20,218	204.5	198	22,442	225.6	161	24,694	185.5	180	22,070	185.5	186	24,153	208.0	153	26,358
9,000	23.9	177.4	155	19,161	197.2	133	21,435	224.0	85.0	23,715	155.7	141	21,091	179.6	120	23,225	206.5	74.7	25,379
	26.7	181.8	175	19,427	201.5	151	21,701	225.5	114	23,891	164.3	158	21,357	184.0	140	23,490	209.3	105	25,645
	29.4	196.0	188	20,408	207.2	180	22,632	227.1	141	24,862	178.5	171	22,188	186.8	169	24,272	210.8	132	26,526
	32.2	204.5	197	20,693	210.1	204	22,917	229.8	168	25,148	192.6	185	22,474	189.7	190	24,557	212.3	159	26,812

Notes:

1. All capacities are gross and have not considered indoor fan heat. To obtain net cooling capacity subtract indoor fan heat;

2. TC = Total Capacity (Unit: 1,000Btu/h); SC = Sensible Capacity (Unit: 1,000Btu/h).

MRC-175HWN1-R(C)

Heating capacity:

Net Capacities (kW) @ 7,600CFM								
Outdoor Temp. (°C)	Peak net heating (kW) at indicated dry bulb (°C)				Peak total power input (kW) at indicated dry bulb (°C)			
70% RH	15	20	24	27	15	20	24	27
-9	37.7	36.6	36.2	36.2	15.9	17.3	18.2	19.6
-6	39.7	38.4	38	37.6	16	17.6	18.6	19.9
-3	42.2	41.5	41.2	40.4	16.2	17.7	18.9	20.3
0	45.6	44.9	44.2	43.7	16.3	18	19.2	20.4
3	53	52.4	51.6	50.9	16.7	18.3	19.6	20.7
7	65.5	64	59.9	59.5	17.3	19.5	20.3	21.4
9	70.3	69.4	68.6	67.9	18	20	21.3	22.6
12	74.8	77.5	77.2	76.4	18.7	20.9	22.1	23.4
15	80.9	79.7	79.1	78.2	19.2	21.4	22.6	24
18	85.9	84.4	83.4	82.7	19.7	22	23.3	24.4
21	92.4	90.5	89.2	88	20	22.3	23.4	24.7
24	97.8	95.2	93.5	92.4	20.6	22.6	24.3	25.1

Notes:

1. The values of heating capacity and power input are integrated to include the effects of defrost in the frost region.

MRC-200HWN1-R(C)

Cooling capacity:

Gross Cooling Capacity																		
Ambient DB(°C)		29.4									35							
Indoor	WB(°C)	16.1			19.4			22.8			16.1			19.4			22.8	
CFM	DB(°C)	TC	SC	PI	TC	SC	PI	TC	SC	PI	TC	SC	PI	TC	SC	PI	TC	SC	PI
7,000	23.9	216.2	174	20,279	242.2	138	21,474	225.9	95.5	22,772	202.7	166	20,647	227.0	132	21,843	249.5	91.3	23,141
	26.7	218.8	206	20,348	245.2	169	21,614	260.8	128	22,858	207.6	198	20,786	230.2	163	22,052	252.6	123	23,296
	29.4	228.6	222	20,903	247.9	198	21,797	264.0	155	23,030	217.4	211	21,342	233.5	193	22,236	255.7	152	23,468
	32.2	241.4	234	20,919	251.3	229	22,002	267.3	180	23,085	231.8	225	21,357	238.2	224	22,441	259.1	179	23,524
8,800	23.9	222.1	183	20,599	249.4	145	22,043	258.8	97.3	22,865	205.3	175	20,957	236.5	138	22,402	251.3	93.2	23,224
	26.7	226.8	219	20,639	251.2	175	22,163	262.4	131	22,941	214.1	206	21,077	240.0	171	22,602	254.1	127	23,379
	29.4	236.5	229	20,919	252.6	208	22,236	267.3	158	23,157	227.0	218	21,358	241.4	203	22,674	258.0	156	23,596
	32.2	249.4	242	21,007	254.3	238	22,324	270.3	183	23,213	239.8	230	21,445	243.0	237	22,763	262.4	185	23,652
10,300	23.9	224.5	193	20,425	252.5	147	22,247	262.1	99.1	22,789	212.5	185	21,070	244.7	193	22,891	253.6	95.0	23,433
	26.7	230.2	223	20,903	254.4	180	22,519	265.6	132	23,096	217.4	211	21,342	246.5	231	22,957	256.9	130	23,535
	29.4	244.7	237	20,992	255.9	214	22,608	268.7	161	23,198	233.5	226	21,431	248.1	233	23,046	260.1	160	23,637
	32.2	255.9	248	21,080	257.8	248	22,680	272.0	190	23,308	246.3	239	21,519	249.4	246	23,118	261.7	190	23,747

Notes:

1. All capacities are gross and have not considered indoor fan heat. To obtain net cooling capacity subtract indoor fan heat;

2. TC = Total Capacity (Unit: 1,000Btu/h); SC = Sensible Capacity (Unit: 1,000Btu/h).

MRC-200HWN1-R(C)

Cooling capacity: (Continued)

Gross Cooling Capacity																			
Ambient DB(°C)		40.6									46.1								
Indoor	WB(°C)	16.1			19.4			22.8			16.1			19.4			22.8		
CFM	DB(°C)	TC	SC	PI	TC	SC	PI	TC	SC	PI	TC	SC	PI	TC	SC	PI	TC	SC	PI
7,000	23.9	188.6	158	22,031	216.2	125	26,475	245.5	86.7	28,673	178.9	158	31,297	192.7	120	31,741	218.7	71.7	34,362
	26.7	193.5	188	26,170	219.5	156	26,684	247.1	118	28,828	185.4	180	31,436	196.0	139	31,950	222.0	103	34,517
	29.4	203.2	197	26,725	224.4	187	26,867	248.7	148	29,000	201.6	196	31,991	197.6	170	32,134	225.2	133	34,689
	32.2	219.5	213	26,741	226.0	219	27,073	250.4	176	29,056	217.9	212	32,007	200.9	201	32,339	226.9	164	34,745
8,800	23.9	195.1	169	26,341	217.9	144	27,034	248.7	88.7	28,756	183.7	167	31,607	194.4	126	32,300	225.2	73.5	34,445
	26.7	200.0	194	26,461	222.7	164	27,234	250.4	122	28,911	193.5	188	31,727	199.2	148	32,500	228.5	108	34,601
	29.4	216.2	210	26,741	229.2	198	27,306	252.0	153	29,128	209.7	204	32,008	202.5	181	32,572	230.1	139	34,817
	32.2	226.0	219	26,829	232.5	209	27,395	255.2	184	29,183	226.0	219	32,095	205.7	206	32,661	231.7	170	34,873
10,300	23.9	198.4	179	26,453	229.2	136	27,523	252.0	90.3	28,965	188.6	176	31,719	205.7	150	32,789	230.1	77.4	34,654
	26.7	206.5	200	26,725	232.5	172	27,589	253.6	126	29,067	200.0	194	31,991	209.0	172	32,855	231.7	112	34,756
	29.4	224.4	218	26,814	235.7	208	27,678	255.2	157	29,169	217.9	212	32,081	213.9	207	34,055	233.4	146	34,858
	32.2	239.0	232	26,903	239.0	239	27,750	256.9	188	29,279	234.1	227	32,169	217.1	208	34,128	235.0	180	34,968

Notes:

1. All capacities are gross and have not considered indoor fan heat. To obtain net cooling capacity subtract indoor fan heat;

2. TC = Total Capacity (Unit: 1,000Btu/h); SC = Sensible Capacity (Unit: 1,000Btu/h).

MRC-200HWN1-R(C)

Heating capacity:

Net Capacities (kW) @ 10,000CFM								
Outdoor Temp. (°C)	Peak net heating (kW) at indicated dry bulb (°C)				Peak total power input (kW) at indicated dry bulb (°C)			
70% RH	15	20	24	27	15	20	24	27
-9	45.2	44	43.6	43.6	19	20.8	21.8	23.4
-6	47.4	46	45.6	45	19.2	21	22.2	23.8
-3	50.2	49.4	49	48.2	19.4	21.2	22.6	24.2
0	54	53.2	52.4	51.8	19.6	21.6	23	24.4
3	62.2	61.6	60.6	59.8	20	22	23.4	24.8
7	77	76.2	75.4	74.8	20.8	23.6	24.2	25.6
9	81.4	80.4	79.6	78.8	21.6	24	25.4	27
12	86.4	89.4	89	88.2	22.4	25	26.4	28
15	93.2	91.8	91.2	90.2	23	25.6	27	28.6
18	98.8	97	96	95.2	23.6	26.2	27.8	29.2
21	106	103.8	102.4	101	24	26.6	28	29.4
24	112	109	107.2	106	24.6	27	29	30

Notes:

1. The values of heating capacity and power input are integrated to include the effects of defrost in the frost region.

MRC-250HWN1-R(C)

Cooling capacity:

Gross Cooling Capacity																		
Ambient DB(°C)		29.4									35							
Indoor	WB(°C)	16.1			19.4			22.8			16.1			19.4			22.8	
CFM	DB(°C)	TC	SC	PI	TC	SC	PI	TC	SC	PI	TC	SC	PI	TC	SC	PI	TC	SC	PI
8,000	23.9	266.8	232	25,083	298.0	173	25,583	309.3	109	26,159	246.5	221	25,851	273.8	167	28,060	306.5	105	29,949
	26.7	272.4	236	25,283	304.3	220	25,783	315.7	162	26,363	251.7	226	26,033	279.5	214	28,260	312.9	153	30,158
	29.4	278.2	242	25,355	310.7	266	25,855	322.4	199	26,437	257.1	231	26,100	285.4	259	28,332	319.5	194	30,233
	32.2	284.0	247	25,483	317.2	302	25,983	329.1	238	26,567	262.5	236	26,217	291.4	298	28,460	326.2	234	30,366
9,000	23.9	274.0	248	25,373	301.0	179	25,873	310.3	110	26,469	254.3	238	26,101	278.3	175	28,350	307.3	108	30,259
	26.7	279.8	253	25,573	307.3	230	26,073	316.8	164	26,673	259.6	243	26,283	289.6	227	28,550	313.7	156	30,468
	29.4	285.7	258	25,645	313.8	285	26,145	323.4	206	26,747	265.1	248	26,350	295.7	275	28,622	320.3	201	30,543
	32.2	291.7	264	25,773	320.4	311	26,273	330.2	257	26,877	270.8	253	26,467	301.9	301	28,750	327.0	252	30,676
10,000	23.9	280.8	263	25,663	303.8	187	26,163	311.0	112	26,779	261.8	253	26,351	294.0	183	28,650	309.0	108	30,569
	26.7	286.7	268	25,863	310.1	263	26,363	317.5	170	26,983	267.3	259	26,533	300.0	258	28,850	315.5	159	30,778
	29.4	292.7	274	25,935	316.6	281	26,435	324.2	221	27,057	272.9	264	26,600	306.5	271	28,922	322.1	209	30,853
	32.2	298.9	280	26,063	323.3	316	26,563	331.0	261	27,187	278.7	269	26,717	312.9	311	29,050	328.9	251	30,986
11,000	23.9	286.0	276	25,953	305.3	214	26,453	314.0	114	27,089	267.3	261	26,601	297.3	190	29,117	309.8	111	30,879
	26.7	292.0	282	26,153	311.7	259	26,653	320.6	179	27,293	272.9	266	26,783	303.5	250	29,205	316.3	171	31,088
	29.4	298.2	288	26,225	318.2	288	26,725	327.3	225	27,367	278.7	272	26,850	309.9	279	29,278	322.9	210	31,163
	32.2	304.4	294	26,353	324.9	318	26,853	334.2	268	27,497	284.6	278	26,967	316.4	285	29,350	329.7	257	31,296

Notes:

1. All capacities are gross and have not considered indoor fan heat. To obtain net cooling capacity subtract indoor fan heat;
2. TC = Total Capacity (Unit: 1,000Btu/h); SC = Sensible Capacity (Unit: 1,000Btu/h).

MRC-250HWN1-R(C)

Cooling capacity: (Continued)

Gross Cooling Capacity																			
Ambient DB(°C)		40.6									46.1								
Indoor	WB(°C)	16.1			19.4			22.8			16.1			19.4			22.8		
CFM	DB(°C)	TC	SC	PI	TC	SC	PI	TC	SC	PI	TC	SC	PI	TC	SC	PI	TC	SC	PI
8,000	23.9	237.2	222	29,488	276.7	170	32,198	310.4	112	35,029	209.7	205	34,204	247.2	153	36,914	291.9	99.4	41,784
	26.7	242.0	227	29,670	282.3	217	32,397	316.7	159	35,246	214.1	210	34,386	252.3	202	37,114	298.0	147	42,008
	29.4	246.9	232	29,737	288.0	266	32,470	323.1	199	35,323	218.6	214	34,453	257.6	249	37,186	304.1	187	42,085
	32.2	251.9	236	29,854	293.8	290	32,597	329.6	235	35,460	223.2	219	34,570	263.0	255	37,314	310.4	216	42,225
9,000	23.9	245.4	239	29,738	283.2	179	32,488	312.4	114	35,339	216.9	209	34,454	251.9	162	37,204	294.2	101	42,094
	26.7	250.4	244	29,920	288.9	231	32,687	318.7	165	35,556	221.5	214	34,636	257.2	215	37,404	300.3	154	42,318
	29.4	255.5	249	29,987	294.8	281	32,760	325.2	204	35,633	226.1	219	34,703	262.5	257	37,476	306.5	190	42,395
	32.2	260.7	254	30,104	300.7	296	32,887	331.8	261	35,770	230.8	223	34,820	268.0	263	37,604	312.8	247	42,535
10,000	23.9	250.4	234	29,988	287.4	186	32,788	313.9	115	35,649	224.7	219	34,704	257.9	171	37,504	295.9	103	42,404
	26.7	255.5	239	30,170	293.2	247	32,987	320.3	165	35,866	229.4	224	34,886	263.3	229	38,130	302.0	154	42,628
	29.4	260.7	244	30,237	299.2	277	33,060	326.7	211	35,943	234.2	229	34,953	268.8	262	38,230	308.3	197	42,705
	32.2	266.0	249	30,354	305.2	293	33,187	333.4	258	36,080	239.1	234	35,070	274.4	271	30,304	314.7	243	42,845
11,000	23.9	259.7	254	30,238	291.7	195	33,254	315.4	117	35,959	233.4	230	34,954	264.4	179	38,370	296.7	105	42,714
	26.7	264.9	259	30,420	297.6	258	33,343	321.8	175	36,176	238.3	235	35,136	269.9	243	38,459	302.8	162	42,938
	29.4	270.3	264	30,487	303.6	281	33,415	328.3	212	36,253	243.3	239	35,203	275.5	270	38,531	309.1	197	43,015
	32.2	275.8	270	30,604	309.7	292	33,487	334.9	257	36,390	248.4	244	35,320	281.3	276	38,604	315.5	244	43,155

Notes:

1. All capacities are gross and have not considered indoor fan heat. To obtain net cooling capacity subtract indoor fan heat;
2. TC = Total Capacity (Unit: 1,000Btu/h); SC = Sensible Capacity (Unit: 1,000Btu/h).

MRC-250HWN1-R(C)

Heating capacity:

Net Capacities (kW) @ 10,000CFM								
Outdoor Temp. (°C)	Peak net heating (kW) at indicated dry bulb (°C)				Peak total power input (kW) at indicated dry bulb (°C)			
70% RH	15	20	24	27	15	20	24	27
-5	61.9	59.7	59.1	58.3	30.2	33	34.8	37.2
-2.8	66.1	64.9	64.3	63.1	30.6	33.2	35.4	37.8
0	71.7	70.5	69.3	68.5	30.8	33.8	36	38
2.8	84.1	83.1	81.7	80.5	31.4	34.4	36.6	38.6
6.1	98.1	96.7	95.5	94.9	32.6	35	37.8	39.8
8.9	112.9	111.3	110.1	108.9	33.8	37.4	39.6	42
12.2	120.3	124.9	124.3	123.1	35	39	41	43.4
15.6	130.5	128.5	127.5	126.1	36	38.9	42	44.4
17.8	138.9	136.3	134.7	133.5	36.8	40.8	43.2	45.2
21.1	149.7	146.5	144.3	142.3	37.4	41.4	43.4	45.6
23.9	158.7	154.3	151.5	149.7	38.4	42	45	46.4

Notes:

1. The values of heating capacity and power input are integrated to include the effects of defrost in the frost region.

MRC-300HWN1-R(C)

Cooling capacity:

Gross Cooling Capacity																			
Ambient DB(°C)		29.4									35								
Indoor	WB(°C)	16.1			19.4			22.8			16.1			19.4			22.8		
CFM	DB(°C)	TC	SC	PI	TC	SC	PI	TC	SC	PI	TC	SC	PI	TC	SC	PI	TC	SC	PI
9,000	23.9	286.2	223	22,870	322.3	176	26,157	348.4	120	27,149	271.3	211	27,079	313.6	116	31,557	340.8	113	33,110
	26.7	287.0	265	23,478	328.4	220	26,374	357.6	166	27,601	245.5	263	30,909	316.0	157	32,243	345.8	157	33,472
	29.4	300.9	289	24,722	334.3	258	26,557	360.0	204	28,227	282.6	277	30,099	318.4	223	32,910	349.2	199	34,025
	32.2	320.1	313	26,357	342.0	303	26,775	365.0	242	28,610	305.9	300	31,881	329.9	301	33,129	353.0	235	34,635
10,000	23.9	294.7	237	23,070	332.8	185	26,457	352.7	122	27,549	375.0	225	27,279	320.7	176	31,857	343.5	116	33,510
	26.7	298.6	284	23,678	337.1	230	26,675	359.9	170	28,001	282.2	272	31,109	325.5	221	32,543	347.9	163	33,872
	29.4	312.7	304	24,922	341.1	272	26,857	364.7	209	28,627	296.5	291	30,299	330.2	265	33,210	352.5	205	34,425
	32.2	331.7	322	26,557	346.2	317	27,075	369.4	246	29,010	317.5	312	32,081	337.1	310	33,429	357.6	244	35,035
11,500	23.9	303.2	251	23,269	343.3	194	26,757	357.0	125	27,949	278.7	239	27,479	327.8	236	32,157	346.2	119	33,910
	26.7	310.2	303	23,878	345.8	239	26,975	362.2	174	28,401	318.9	282	31,309	335.0	284	32,843	350.0	169	34,272
	29.4	324.5	318	25,122	347.9	287	27,157	369.4	214	29,027	310.4	305	30,499	342.0	308	33,510	355.8	211	34,825
	32.2	343.3	331	26,757	350.4	331	27,375	373.8	251	29,410	329.1	323	32,281	344.3	319	33,729	362.2	254	35,435
12,500	23.9	306.9	265	23,470	347.7	198	27,057	361.8	128	28,349	289.3	254	27,679	346.6	239	32,457	349.4	122	34,310
	26.7	315.2	306	24,078	350.6	246	27,275	367.0	176	28,801	296.5	291	31,509	349.3	256	33,143	354.1	172	34,672
	29.4	336.3	326	25,322	352.7	296	27,457	371.5	218	29,427	319.9	314	30,699	351.6	300	33,810	358.9	216	35,225
	32.2	352.7	342	26,957	355.6	325	27,675	376.3	247	29,810	338.6	332	32,481	353.6	325	34,029	361.2	261	35,835

Notes:

1. All capacities are gross and have not considered indoor fan heat. To obtain net cooling capacity subtract indoor fan heat;
2. TC = Total Capacity (Unit: 1,000Btu/h); SC = Sensible Capacity (Unit: 1,000Btu/h).

MRC-300HWN1-R(C)

Cooling capacity: (Continued)

Gross Cooling Capacity																			
Ambient DB(°C)		40.6									46.1								
Indoor	WB(°C)	16.1			19.4			22.8			16.1			19.4			22.8		
CFM	DB(°C)	TC	SC	PI	TC	SC	PI	TC	SC	PI	TC	SC	PI	TC	SC	PI	TC	SC	PI
9,000	23.9	244.8	198	35,522	292.3	138	39,425	332.7	107	44,794	293.3	196	40,814	299.5	195	46,079	310.1	103	49,812
	26.7	252.0	245	36,409	295.0	199	40,300	335.4	149	45,077	244.0	234	42,592	301.5	221	46,974	315.0	146	50,396
	29.4	256.9	250	39,329	299.3	240	41,470	337.5	191	45,385	267.8	257	45,550	303.5	262	47,298	322.3	191	50,682
	32.2	290.2	282	41,091	299.5	294	42,061	337.4	228	45,964	291.6	280	48,509	306.5	307	48,143	324.6	234	50,993
10,000	23.9	254.3	214	35,722	294.7	166	39,725	337.5	110	45,194	246.5	210	41,014	301.8	205	47,179	319.7	109	50,212
	26.7	261.5	254	36,609	299.6	211	40,600	340.0	155	45,477	256.0	242	42,792	306.4	234	48,074	324.5	154	50,796
	29.4	275.8	268	39,529	306.5	256	41,770	342.3	199	45,785	279.8	266	45,750	308.7	278	48,398	329.3	199	51,032
	32.2	299.6	291	41,291	309.0	303	42,361	344.6	240	46,364	303.6	289	48,709	313.6	303	49,243	331.7	243	51,393
11,500	23.9	263.8	230	35,922	297.1	194	40,025	342.3	112	45,594	253.7	224	41,214	304.1	214	48,279	329.3	115	50,612
	26.7	271.0	263	36,809	304.2	223	40,900	344.6	161	45,877	268.0	251	42,992	311.3	246	49,174	334.0	162	51,196
	29.4	294.7	286	39,729	313.7	272	42,070	347.1	206	46,185	291.8	274	45,950	313.9	295	49,498	336.3	208	91,482
	32.2	309.0	300	41,491	318.5	313	42,661	351.8	251	46,764	315.6	297	48,909	320.7	299	50,343	338.8	253	51,793
12,500	23.9	268.6	244	36,122	313.7	181	40,325	347.1	115	45,994	260.9	236	41,414	320.7	229	48,579	336.3	117	51,012
	26.7	280.4	276	37,009	318.5	235	41,200	349.4	167	46,277	265.9	250	43,192	325.6	262	49,474	338.8	167	51,596
	29.4	306.5	301	39,929	323.3	287	42,370	351.8	212	46,585	286.2	263	46,150	332.5	302	49,798	341.1	217	51,882
	32.2	328.0	318	41,691	328.0	322	42,961	353.7	258	47,164	327.4	302	49,109	340.8	306	50,643	343.5	267	52,193

Notes:

1. All capacities are gross and have not considered indoor fan heat. To obtain net cooling capacity subtract indoor fan heat;
2. TC = Total Capacity (Unit: 1,000Btu/h); SC = Sensible Capacity (Unit: 1,000Btu/h).

MRC-300HWN1-R(C)

Heating capacity:

Net Capacities (kW) @ 10,000CFM								
Outdoor Temp. (°C)	Peak net heating (kW) at indicated dry bulb (°C)				Peak total power input (kW) at indicated dry bulb (°C)			
70% RH	15	20	24	27	15	20	24	27
-5	76.5	74.3	73.7	72.9	31.7	34.5	36.3	38.7
-2.8	80.7	79.5	78.9	77.7	32.1	34.7	36.9	39.3
0	86.3	85.1	83.9	83.1	32.3	35.3	37.5	39.5
2.8	98.7	97.7	96.3	95.1	32.9	35.9	38.1	40.1
6.1	112.7	111.3	110.1	109.5	34.1	36.5	39.3	41.3
8.9	127.5	125.9	124.7	123.5	35.3	38.9	41.1	43.5
12.2	134.9	139.5	138.9	137.7	36.5	40.5	42.5	44.9
15.6	145.1	143.1	142.1	140.7	37.5	41.3	43.5	45.9
17.8	153.5	150.9	149.3	148.1	38.3	42.3	44.7	46.7
21.1	164.3	161.1	158.9	156.9	38.9	42.9	44.9	47.1
23.9	173.3	168.9	166.1	164.3	39.9	43.5	46.5	47.9

Notes:

1. The values of heating capacity and power input are integrated to include the effects of defrost in the frost region.

6. Electrical data

Model	Power Supply			Compressor				Eva.Fan Motor			Con. Fan Motor		
	MCA	TOCA	MFA	STC	RNC	IPT	Qty	RNC	IPT	Qty	RNC (Each)	IPT (Each)	Qty.
MRC-062HWN1-R(C)	23.5	28.9	33.2	75	9.7	5.65	1	7.22	1.62	1	3.65	0.83	1
MRC-075HWN1-R(C)	29.4	36.5	43.7	121.2	14.3	8.08	1	7.18	1.61	1	3.93	0.88	1
MRC-085HWN1-R(C)	29.6	36.3	47.2	62×2	8.8×2	5.13×2	2	2.90	1.39	1	3.93	0.88	1
MRC-100HWN1-R(C)	30.2	37.3	49.4	66×2	9.6×2	5.7×2	2	3.50	1.84	1	2.51	0.98	1
MRC-125HWN1-R(C)	41.5	52.9	66.4	64+139	8.3+16.6	4.75+9.16	2	4.84	2.03	1	3.66	0.83	1
MRC-150HWN1-R(C)	45.4	58.1	72.4	64+144	8.3+18.7	4.75+10.8	2	7.50	3.97	1	2.80	1.27	1
MRC-175HWN1-R(C)	55.2	72.7	88.4	139×2	16.6×2	9.16×2	2	6.60	3.03	1	3.53×2	0.80×2	2
MRC-200HWN1-R(C)	61.3	81.2	98.7	144×2	18.7×2	10.8×2	2	8.90	4.35	1	2.84×2	1.29×2	2
MRC-250HWN1-R(C)	74.7	93.4	116	158×2	20.66×2	12.1×2	2	9.70	4.40	1	3.71×2	2.07×2	2
MRC-300HWN1-R(C)	84.3	104.6	133.4	197×2	24.52×2	13.7×2	2	13.60	7.40	1	3.71×2	2.07×2	2

Notes:

MCA: Min. Current Amps. (A) TOCA: Total Over-current Amps. (A) MFA: Max. Fuse Amps (A)

STC: Starting Current (A); RNC: Running Current (A); IPT: Input Power (kW); Qty: Quantity

For 3Ph units, Voltage imbalance between each phases should be <2%.

7. Fan performance data

MRC-062HWN1-R(C)

Static Pressure	Item	High speed	Medium speed	Low speed
0Pa	Fan speed (rpm)	1,001	901	810
	Power input (W)	1,665	1,386	1,164
	Air flow (CFM)	3,001	2,647	2,356
50Pa	Fan speed (rpm)	1,063	972	899
	Power input (W)	1,607	1,341	1,133
	Air flow (CFM)	2,909	2,564	2,270
75Pa	Fan speed (rpm)	1,098	1,016	946
	Power input (W)	1,582	1,317	1,120
	Air flow (CFM)	2,825	2,503	2,190
100Pa	Fan speed (rpm)	1,122	1,047	977
	Power input (W)	1,526	1,280	1,079
	Air flow (CFM)	2,759	2,401	2,105
150Pa	Fan speed (rpm)	1,173	1,106	/
	Power input (W)	1,452	1,230	/
	Air flow (CFM)	2,560	2,250	/
200Pa	Fan speed (rpm)	1,219	1,162	/
	Power input (W)	1,375	1,182	/
	Air flow (CFM)	2,367	2,109	/
250Pa	Fan speed (rpm)	1,265	/	/
	Power input (W)	1,305	/	/
	Air flow (CFM)	2,182	/	/

Notes: The unit only has one speed of indoor side fan, and high speed is the factory default. If the unit operating with other fan speed, the wiring between fan motor and main PCB board should be adjusted.

MRC-075HWN1-R(C)

Static Pressure	Item	High speed	Medium speed	Low speed
0Pa	Fan speed (rpm)	1,035	936	844
	Power input (W)	1,716	1,432	1,197
	Air flow (CFM)	3,074	2,697	2,403
50Pa	Fan speed (rpm)	1,081	991	909
	Power input (W)	1,652	1,409	1,160
	Air flow (CFM)	2,981	2,596	2,284
75Pa	Fan speed (rpm)	1,110	1,026	954
	Power input (W)	1,650	1,360	1,137
	Air flow (CFM)	2,951	2,574	2,223
100Pa	Fan speed (rpm)	1,127	1,051	984
	Power input (W)	1,591	1,377	1,126
	Air flow (CFM)	2,825	2,438	2,146
150Pa	Fan speed (rpm)	1,173	1,110	/
	Power input (W)	1,525	1,338	/
	Air flow (CFM)	2,657	2,313	/
200Pa	Fan speed (rpm)	1,217	1,165	/
	Power input (W)	1,449	1,281	/
	Air flow (CFM)	2,483	2,187	/
250Pa	Fan speed (rpm)	1,263	/	/
	Power input (W)	1,420	/	/
	Air flow (CFM)	2,331	/	/

Notes: The unit only has one speed of indoor side fan, and high speed is the factory default. If the unit operating with other fan speed, the wiring between fan motor and main PCB board should be adjusted.

Blower drive options						
Model	Motor			Blower		
	HP	rpm	Pulley pitch Dia. (inch)	Fan speed range (rpm)		Pulley pitch Dia. (inch)
				Min.	Max.	
MRC-085HWN1-R(C)	2	1,400	4.53 - 5.25	821	918	8.35
MRC-100HWN1-R(C)	2	1,400	4.53 - 5.25	931	1,016	7.48
MRC-125HWN1-R(C)	4	1,420	4.53 - 5.25	769	871	8.82
MRC-150HWN1-R(C)	5.3	1,440	4.53 - 5.25	949	1,112	7.48
MRC-175HWN1-R(C)	5.3	1,440	4.53 - 5.25	927	1,045	9.84
MRC-200HWN1-R(C)	5.3	1,440	4.53 - 5.25	1,081	1,284	5.91
MRC-250HWN1-R(C)	7.3	1,440	4.53 - 5.25	925	1,088	7.09
MRC-300HWN1-R(C)	7.3	1,440	4.53 - 5.25	1,022	1,195	6.30

Example for selection process:

The following data are the rated design points for MRC-085HWN1-R(C) rooftop packages:

Air flow = 3520CFM; External static pressure = 0.3in.w.g; Fan speed = 862rpm;

Power input = 1405W; The No. of turns = 1N.

To increase the ESP (External Static Pressure) to 0.4in.w.g, but maintain the airflow rate at 3500CFM, please follow the steps below:

Step 1: Selection of new desired point.

From the table data, select the point that can meet both of the requirements.

ESP = 0.4in.w.g;

Air flow rate (Near or equal to) ≈ 3500CFM.

Step 2: Read fan speed, power input:

Air flow = 3483CFM;

Fan speed = 896rpm;

Power input = 1400W.

Step 3: Read number of turns for variable pitch pulley.

Similarly, use this RPM value to read the No. of turns (N) by referring to the table of 'Motor Variable Pitch Pulley Data'. The variable pitch pulley for motor shall be adjusted to this 'N' in order to get 3483cfm. First, adjust the motor pulley to 0 turns. Then, make 0.25 turns on the pulley. Cross check the dimension 'X', and it stands for regulation space of motor pulley. In this case, X = 1mm.

Pulley pitch factory set point: the table, No. of turns = 1.5N.

Video for Variable Speed Pulley Operating Guidelines

Click for video:



http://video.midea.com/public/2016/01/29/20160129_1528c9ec886_r1.mp4

Scan for video: (Only for iPhone, iPad, etc.)

MRC-085HWN1-R(C)

ESP (Pa)	N	0	0.25	0.5	0.75	1	1.25	1.5	1.75	2
	X	0.5	1	1.5	2	2.5	3	3.5	4	4.5
0	Fan speed (rpm)	896	887	876	866	855	847	839	830	821
	Power input (W)	1,790	1,720	1,710	1,665	1,620	1,560	1,500	1,445	1,390
	Air flow (CFM)	4,320	4,213	4,166	4,130	4,094	4,041	3,988	3,946	3,905
25	Fan speed (rpm)	899	890	878	867	857	849	842	849	823
	Power input (W)	1,710	1,640	1,630	1,590	1,550	1,490	1,430	1,378	1,325
	Air flow (CFM)	4,134	4,035	3,987	3,943	3,899	3,855	3,810	3,761	3,713
50	Fan speed (rpm)	902	893	880	869	858	851	844	851	825
	Power input (W)	1,630	1,560	1,550	1,515	1,480	1,420	1,360	1,310	1,260
	Air flow (CFM)	3,947	3,858	3,808	3,756	3,705	3,669	3,632	3,577	3,521
75	Fan speed (rpm)	904	896	880	871	**862**	854	847	854	827
	Power input (W)	1,555	1,485	1,467	1,436	**1,405**	1,345	1,285	1,235	1,185
	Air flow (CFM)	3,770	3,675	3,620	3,570	**3,520**	3,470	3,420	3,364	3,307
100	Fan speed (rpm)	907	896	885	876	866	858	849	858	828
	Power input (W)	1,470	1,400	1,390	1,360	1,330	1,265	1,200	1,150	1,100
	Air flow (CFM)	3,582	3,483	3,428	3,321	3,215	3,215	3,215	3,154	3,092
125	Fan speed (rpm)	910	900	886	877	869	860	852	860	830
	Power input (W)	1,375	1,310	1,295	1,265	1,235	1,175	1,115	1,065	1,015
	Air flow (CFM)	3,362	3,266	3,206	3,122	3,039	3,005	2,971	2,901	2,831
150	Fan speed (rpm)	913	903	887	879	871	863	854	863	832
	Power input (W)	1,280	1,220	1,200	1,170	1,140	1,085	1,030	980	930
	Air flow (CFM)	3,141	3,048	2,984	2,924	2,864	2,795	2,727	2,649	2,570
175	Fan speed (rpm)	915	906	892	883	874	865	857	/	/
	Power input (W)	1,170	1,115	1,095	1,068	1,040	945	850	/	/
	Air flow (CFM)	2,851	2,761	2,683	2,619	2,555	2,325	2,094	/	/
200	Fan speed (rpm)	918	909	897	887	876	868	859	/	/
	Power input (W)	1,060	1,010	990	965	940	805	670	/	/
	Air flow (CFM)	2,560	2,473	2,383	2,315	2,246	1,854	1,462	/	/

Notes:

1. Legend: X – Regulation space of motor pulley (mm); N: Number of turns; ESP: External static pressure (Pa);

2: Pulley pitch factory set point: The table, No. of turns (N) = 5;

3. Bold data is the performance testing set point;

4. Shading data are rated airflow.

MRC-100HWN1-R(C),

ESP	N	0	0.25	0.5	0.75	1	1.25	1.5	1.75	2
(Pa)	X	0.5	1	1.5	2	2.5	3	3.5	4	4.5
0	Fan speed (rpm)	/	/	/	/	/	/	962	946	931
	Power input (W)	/	/	/	/	/	/	2,020	1,945	1,870
	Air flow (CFM)	/	/	/	/	/	/	4,343	4,275	4,207
25	Fan speed (rpm)	/	/	/	/	/	969	964	969	933
	Power input (W)	/	/	/	/	/	2,010	1,930	1,855	1,780
	Air flow (CFM)	/	/	/	/	/	4,220	4,178	4,107	4,035
50	Fan speed (rpm)	/	/	/	/	977	972	967	972	935
	Power input (W)	/	/	/	/	1,990	1,915	1,840	1,765	1,690
	Air flow (CFM)	/	/	/	/	4,104	4,058	4,013	3,938	3,864
75	Fan speed (rpm)	/	/	/	981	980	975	970	975	937
	Power input (W)	/	/	/	1,998	1,915	1,843	1,770	1,695	1,620
	Air flow (CFM)	/	/	/	4,003	3,974	3,921	3,868	3,797	3,726
100	Fan speed (rpm)	/	/	**986**	984	982	977	972	977	938
	Power input (W)	/	/	**2,000**	1,900	1,800	1,730	1,660	1,590	1,520
	Air flow (CFM)	/	/	**3,923**	3,849	3,775	3,709	3,644	3,583	3,522
125	Fan speed (rpm)	/	989	989	987	985	980	975	980	940
	Power input (W)	/	1,980	1,960	1,833	1,705	1,635	1,565	1,495	1,425
	Air flow (CFM)	/	3,861	3,756	3,731	3,600	3,533	3,465	3,400	3,334
150	Fan speed (rpm)	1,009	991	991	990	988	983	978	983	942
	Power input (W)	2,050	1,880	1,865	1,738	1,610	1,540	1,470	1,400	1,330
	Air flow (CFM)	3,697	3,639	3,589	3,561	3,424	3,356	3,287	3,217	3,146
175	Fan speed (rpm)	1,011	993	994	992	990	/	/	/	/
	Power input (W)	1,945	1,775	1,770	1,638	1,505	/	/	/	/
	Air flow (CFM)	3,532	3,473	3,406	3,372	3,212	/	/	/	/
200	Fan speed (rpm)	1,012	995	997	995	993	/	/	/	/
	Power input (W)	1,840	1,670	1,660	1,530	1,400	/	/	/	/
	Air flow (CFM)	3,341	3,307	3,224	3,170	2,999	/	/	/	/
225	Fan speed (rpm)	1,014	996	1,000	/	/	/	/	/	/
	Power input (W)	1,725	1,545	1,550	/	/	/	/	/	/
	Air flow (CFM)	3,151	3,128	2,991	/	/	/	/	/	/
250	Fan speed (rpm)	1,016	998	1,002	/	/	/	/	/	/
	Power input (W)	1,610	1,420	1,425	/	/	/	/	/	/
	Air flow (CFM)	2,948	2,896	2,757	/	/	/	/	/	/

Notes:

1. Legend: X – Regulation space of motor pulley (mm); N: Number of turns; ESP: External static pressure (Pa);

2: Pulley pitch factory set point: The table, No. of turns (N) = 5;

3. Bold data is the performance testing set point;

4. Shading data are rated airflow.

MRC-125HWN1-R(C)

ESP	N	0	0.25	0.5	0.75	1	1.25	1.5	1.75	2	2.25	2.5
(Pa)	X	0.5	1	1.5	2	2.5	3	3.5	4	4.5	5	5.5
0	Fan speed (rpm)	857	849	840	828	816	806	795	784	774	772	769
	Power input (W)	3,530	3,445	3,360	3,225	3,090	3,000	2,910	2,810	2,710	2,620	2,530
	Air flow (CFM)	6,773	6,718	6,662	6,575	6,487	6,395	6,302	6,230	6,158	6,103	6,049
25	Fan speed (rpm)	858	850	841	829	817	807	796	785	775	772	770
	Power input (W)	3,415	3,323	3,230	3,103	2,975	2,878	2,780	2,690	2,600	2,513	2,425
	Air flow (CFM)	6,571	6,503	6,435	6,354	6,272	6,176	6,079	6,004	5,929	5,872	5,815
50	Fan speed (rpm)	859	851	842	830	818	808	797	787	776	773	770
	Power input (W)	3,300	3,200	3,100	2,980	2,860	2,755	2,650	2,570	2,490	2,405	2,320
	Air flow (CFM)	6,368	6,288	6,208	6,133	6,057	5,956	5,856	5,778	5,699	5,641	5,582
75	Fan speed (rpm)	861	852	843	831	819	809	798	788	777	774	771
	Power input (W)	3,175	3,078	2,980	2,868	2,755	2,643	2,530	2,455	2,380	2,278	2,175
	Air flow (CFM)	6,151	6,069	5,987	5,901	5,814	5,711	5,608	5,534	5,461	5,363	5,265
700	Fan speed (rpm)	862	853	844	832	**821**	810	799	789	778	775	772
	Power input (W)	3,050	2,955	2,860	2,755	**2,650**	2,530	2,410	2,340	2,270	2,150	2,030
	Air flow (CFM)	5,933	5,850	5,766	5,669	**5,571**	5,465	5,359	5,291	5,222	5,085	4,948
125	Fan speed (rpm)	863	854	845	833	822	811	800	790	779	776	773
	Power input (W)	2,900	2,800	2,700	2,583	2,465	2,358	2,250	2,183	2,115	1,983	1,850
	Air flow (CFM)	5,645	5,538	5,432	5,361	5,290	5,179	5,067	4,977	4,887	4,694	4,500
150	Fan speed (rpm)	864	855	846	834	823	812	801	791	780	777	774
	Power input (W)	2,800	2,700	2,600	2,475	2,350	2,245	2,140	2,075	2,010	1,860	1,710
	Air flow (CFM)	5,456	5,347	5,238	5,169	5,101	4,978	4,856	4,754	4,652	4,398	4,144
175	Fan speed (rpm)	865	856	847	835	824	813	802	792	781	778	774
	Power input (W)	2,635	2,535	2,435	2,323	2,210	2,103	1,995	1,925	1,855	1,713	1,570
	Air flow (CFM)	5,187	5,066	4,946	4,870	4,794	4,656	4,519	4,397	4,275	4,031	3,788

Continued: MRC-125HWN1-R(C)

ESP (Pa)	N	0	0.25	0.5	0.75	1	1.25	1.5	1.75	2	2.25	2.5
	X	0.5	1	1.5	2	2.5	3	3.5	4	4.5	5	5.5
200	Fan speed (rpm)	866	857	848	836	825	814	804	793	782	/	/
	Power input (W)	2,470	2,370	2,270	2,170	2,070	1,960	1,850	1,775	1,700	/	/
	Air flow (CFM)	4,917	4,786	4,654	4,571	4,488	4,335	4,182	4,040	3,898	/	/
225	Fan speed (rpm)	868	859	849	837	826	815	805	794	783	/	/
	Power input (W)	2,295	2,203	2,110	2,000	1,890	1,788	1,685	1,608	1,530	/	/
	Air flow (CFM)	4,575	4,434	4,293	4,187	4,082	3,922	3,763	3,622	3,481	/	/
250	Fan speed (rpm)	869	860	850	838	827	816	806	795	784	/	/
	Power input (W)	2,120	2,035	1,950	1,830	1,710	1,615	1,520	1,440	1,360	/	/
	Air flow (CFM)	4,232	4,082	3,932	3,804	3,676	3,510	3,344	3,204	3,064	/	/
275	Fan speed (rpm)	870	861	851	839	828	/	/	/	/	/	/
	Power input (W)	1,950	1,855	1,760	1,675	1,590	/	/	/	/	/	/
	Air flow (CFM)	3,816	3,674	3,533	3,423	3,314	/	/	/	/	/	/

Notes:

1. Legend: X – Regulation space of motor pulley (mm); N: Number of turns; ESP: External static pressure (Pa);

2: Pulley pitch factory set point: The table, No. of turns (N) = 5;

3. Bold data is the performance testing set point;

4. Shading data are rated airflow.

MRC-150HWN1-R(C)

ESP (Pa)	N	0	0.25	0.5	0.75	1	1.25	1.5	1.75	2
	X	0.5	1	1.5	2	2.5	3	3.5	4	4.5
0	Fan speed (rpm)	/	/	1,008	999	989	979	969	959	949
	Power input (W)	/	/	5,146	4,968	4,790	4,575	4,360	4,155	3,950
	Air flow (CFM)	/	/	7,928	7,867	7,805	7,686	7,566	7,452	7,338
25	Fan speed (rpm)	/	/	1,014	1,003	991	983	974	964	953
	Power input (W)	/	/	5,043	4,824	4,605	4,418	4,230	4,025	3,820
	Air flow (CFM)	/	/	7,791	7,691	7,592	7,473	7,353	7,239	7,124
50	Fan speed (rpm)	/	1,022	1,020	1,006	993	986	979	968	957
	Power input (W)	/	4,954	4,940	4,680	4,420	4,260	4,100	3,895	3,690
	Air flow (CFM)	/	7,700	7,653	7,516	7,379	7,259	7,139	7,025	6,910
75	Fan speed (rpm)	1,031	1,026	1,022	1,009	995	989	982	971	960
	Power input (W)	4,870	4,810	4,750	4,495	4,240	4,088	3,935	3,745	3,555
	Air flow (CFM)	7,622	7,529	7,436	7,313	7,191	7,048	6,904	6,790	6,675
100	Fan speed (rpm)	1,035	1,028	1,021	**1,008**	995	988	982	971	959
	Power input (W)	4,770	4,665	4,560	**4,310**	4,060	3,915	3,770	3,595	3,420
	Air flow (CFM)	7,475	7,347	7,219	**7,111**	7,002	6,836	6,669	6,554	6,439
125	Fan speed (rpm)	1,050	1,044	1,039	1,026	1,013	1,006	998	990	981
	Power input (W)	4,510	4,440	4,370	4,123	3,875	3,760	3,645	3,465	3,285
	Air flow (CFM)	7,113	7,046	6,979	6,844	6,708	6,571	6,434	6,297	6,159
150	Fan speed (rpm)	1,060	1,056	1,052	1,039	1,026	1,021	1,015	1,005	995
	Power input (W)	4,350	4,290	4,230	4,005	3,780	3,695	3,610	3,410	3,210
	Air flow (CFM)	6,899	6,863	6,828	6,679	6,531	6,411	6,291	6,134	5,976
175	Fan speed (rpm)	1,070	1,065	1,060	1,049	1,039	1,032	1,025	1,017	1,008
	Power input (W)	4,170	4,078	3,985	3,808	3,630	3,518	3,405	3,248	3,090
	Air flow (CFM)	6,658	6,609	6,559	6,419	6,279	6,161	6,043	5,859	5,675

Continued: MRC-150HWN1-R(C)

ESP (Pa)	N	0	0.25	0.5	0.75	1	1.25	1.5	1.75	2
	X	0.5	1	1.5	2	2.5	3	3.5	4	4.5
200	Fan speed (rpm)	1,082	1,074	1,067	1,059	1,051	1,044	1,036	1,028	1,020
	Power input (W)	3,990	3,865	3,740	3,610	3,480	3,340	3,200	3,085	2,970
	Air flow (CFM)	6,418	6,354	6,291	6,159	6,027	5,911	5,794	5,584	5,375
225	Fan speed (rpm)	1,089	1,082	1,074	1,065	1,056	1,048	1,040	1,033	1,027
	Power input (W)	3,855	3,728	3,600	3,455	3,310	3,180	3,050	2,928	2,805
	Air flow (CFM)	6,194	6,108	6,022	5,879	5,736	5,600	5,464	5,269	5,075
250	Fan speed (rpm)	1,097	1,089	1,082	1,072	1,061	1,053	1,044	1,038	1,033
	Power input (W)	3,720	3,590	3,460	3,300	3,140	3,020	2,900	2,770	2,640
	Air flow (CFM)	5,971	5,862	5,754	5,600	5,446	5,289	5,133	4,954	4,776
275	Fan speed (rpm)	1,104	1,095	1,086	1,076	1,065	/	/	/	/
	Power input (W)	3,595	3,438	3,280	3,115	2,950	/	/	/	/
	Air flow (CFM)	5,705	5,585	5,464	5,308	5,151	/	/	/	/
300	Fan speed (rpm)	1,112	/	/	/	/	/	/	/	/
	Power input (W)	3,470	/	/	/	/	/	/	/	/
	Air flow (CFM)	5,439	/	/	/	/	/	/	/	/
325	Fan speed (rpm)	1,112	/	/	/	/	/	/	/	/
	Power input (W)	3,470	/	/	/	/	/	/	/	/
	Air flow (CFM)	5,439	/	/	/	/	/	/	/	/

Notes:

1. Legend: X – Regulation space of motor pulley (mm); N: Number of turns; ESP: External static pressure (Pa);

2: Pulley pitch factory set point: The table, No. of turns (N) = 5;

3. Bold data is the performance testing set point;

4. Shading data are rated airflow.

MRC-175HWN1-R(C)

ESP	N	0	0.25	0.5	0.75	1	1.25	1.5	1.75	2	2.25	2.5
(Pa)	X	0.5	1	1.5	2	2.5	3	3.5	4	4.5	5	5.5
0	Fan speed (rpm)	/	/	994	987	980	971	961	953	944	936	927
	Power input (W)	/	/	4,751	4,857	4,962	4,643	4,323	4,216	4,109	3,960	3,811
	Air flow (CFM)	/	/	9,837	9,896	9,955	9,722	9,489	9,498	9,507	9,346	9,185
25	Fan speed (rpm)	/	/	994	988	981	972	963	954	946	937	928
	Power input (W)	/	/	4,580	4,683	4,787	4,494	4,202	4,078	3,955	3,809	3,664
	Air flow (CFM)	/	/	9,575	9,635	9,695	9,506	9,317	9,264	9,211	9,041	8,871
50	Fan speed (rpm)	1,010	1,003	995	988	982	973	965	956	947	939	930
	Power input (W)	4,581	4,495	4,408	4,510	4,612	4,346	4,080	3,940	3,800	3,659	3,517
	Air flow (CFM)	9,591	9,451	9,312	9,373	9,434	9,290	9,145	9,030	8,915	8,736	8,557
75	Fan speed (rpm)	1,012	1,004	997	990	983	975	966	958	949	940	931
	Power input (W)	4,392	4,313	4,235	4,338	4,442	4,181	3,920	3,777	3,635	3,495	3,356
	Air flow (CFM)	9,307	9,153	8,998	9,067	9,136	8,999	8,861	8,729	8,597	8,421	8,246
100	Fan speed (rpm)	1,013	1,005	998	991	984	976	968	959	951	942	933
	Power input (W)	4,202	4,132	4,061	4,166	4,271	4,015	3,759	3,614	3,469	3,332	3,194
	Air flow (CFM)	9,024	8,854	8,683	8,761	8,839	8,708	8,578	8,429	8,279	8,107	7,934
125	Fan speed (rpm)	1,015	1,007	999	992	985	977	969	961	952	943	934
	Power input (W)	4,005	3,934	3,864	3,967	4,071	3,810	3,550	3,404	3,258	3,127	2,996
	Air flow (CFM)	8,684	8,510	8,336	8,421	8,507	8,350	8,194	8,027	7,860	7,684	7,507
150	Fan speed (rpm)	1,018	1,009	1,000	994	987	979	**971**	962	954	945	935
	Power input (W)	3,807	3,737	3,667	3,769	3,870	3,605	**3,340**	3,193	3,046	2,922	2,797
	Air flow (CFM)	8,345	8,167	7,989	8,082	8,175	7,992	**7,809**	7,625	7,441	7,261	7,081
175	Fan speed (rpm)	1,019	1,011	1,002	995	988	980	972	964	955	946	937
	Power input (W)	3,570	3,509	3,448	3,548	3,649	3,374	3,100	2,950	2,801	2,682	2,564
	Air flow (CFM)	7,899	7,719	7,539	7,648	7,757	7,518	7,279	7,093	6,907	9,715	6,522

Continued: MRC-175HWN1-R(C)

ESP	N	0	0.25	0.5	0.75	1	1.25	1.5	1.75	2	2.25	2.5
(Pa)	X	0.5	1	1.5	2	2.5	3	3.5	4	4.5	5	5.5
200	Fan speed (rpm)	1,021	1,012	1,004	998	992	983	974	965	957	947	938
	Power input (W)	3,332	3,281	3,229	3,328	3,427	3,143	2,859	2,707	2,555	2,443	2,330
	Air flow (CFM)	7,454	7,272	7,090	7,215	7,339	7,044	6,748	6,561	6,374	6,169	5,963
225	Fan speed (rpm)	1,033	1,019	1,006	1,000	994	/	/	/	/	/	/
	Power input (W)	3,042	3,135	3,229	3,128	3,026	/	/	/	/	/	/
	Air flow (CFM)	6,817	6,953	7,090	6,696	6,303	/	/	/	/	/	/
250	Fan speed (rpm)	1,045	/	/	/	/	/	/	/	/	/	/
	Power input (W)	2,751	/	/	/	/	/	/	/	/	/	/
	Air flow (CFM)	6,180	/	/	/	/	/	/	/	/	/	/

Notes:

1. Legend: X – Regulation space of motor pulley (mm); N: Number of turns; ESP: External static pressure (Pa);

2: Pulley pitch factory set point: The table, No. of turns (N) = 5;

3. Bold data is the performance testing set point;

4. Shading data are rated airflow.

MRC-200HWN1-R(C)

ESP	N	0	0.25	0.5	0.75	1	1.25	1.5	1.75	2	2.25	2.5	2.75	3
(Pa)	X	0.5	1	1.5	2	2.5	3	3.5	4	4.5	5	5.5	6	6.5
0	Fan speed (rpm)	/	/	/	/	1,194	1,181	1,168	1,154	1,140	1,127	1,113	1,098	1,081
	Power input (W)	/	/	/	/	6,951	6,710	6,468	6,266	6,063	5,831	5,599	5,422	5,188
	Air flow (CFM)	/	/	/	/	11,210	11,104	10,997	10,872	10,746	10,623	10,499	10,306	10,078
25	Fan speed (rpm)	/	/	/	/	1,195	1,182	1,169	1,155	1,141	1,128	1,114	1,100	1,083
	Power input (W)	/	/	/	/	6,756	6,531	6,306	6,103	5,901	5,671	5,442	5,255	5,057
	Air flow (CFM)	/	/	/	/	10,982	10,890	10,798	10,668	10,539	10,398	10,258	10,068	9,892
50	Fan speed (rpm)	/	/	/	1,214	1,196	1,183	1,170	1,156	1,142	1,129	1,115	1,101	1,084
	Power input (W)	/	/	/	6,944	6,561	6,352	6,143	5,941	5,738	5,512	5,285	5,088	4,926
	Air flow (CFM)	/	/	/	10,877	10,754	10,676	10,599	10,465	10,332	10,174	10,016	9,829	9,705
75	Fan speed (rpm)	/	/	/	1,214	1,197	1,184	1,171	1,157	1,143	1,130	1,116	1,102	1,085
	Power input (W)	/	/	/	6,738	6,390	6,180	5,970	5,754	5,539	5,328	5,118	5,069	4,748
	Air flow (CFM)	/	/	/	10,628	10,540	10,453	10,367	10,207	10,047	9,898	9,749	9,807	9,403
100	Fan speed (rpm)	/	1,240	1,228	1,215	1,198	1,185	1,172	1,158	1,145	1,131	1,117	1,103	1,087
	Power input (W)	/	6,941	6,765	6,532	6,218	6,008	5,797	5,568	5,339	5,145	4,950	5,049	4,570
	Air flow (CFM)	/	10,582	10,491	10,378	10,326	10,230	10,135	9,948	9,761	9,622	9,483	9,785	9,102
125	Fan speed (rpm)	/	1,241	1,230	1,215	1,199	1,186	1,173	1,159	1,146	1,131	1,117	1,105	**1,091**
	Power input (W)	/	6,753	6,659	6,367	6,068	5,866	5,663	5,441	5,218	5,013	4,808	4,570	**4,351**
	Air flow (CFM)	/	10,357	10,349	10,170	10,113	10,017	9,922	9,753	9,584	9,435	9,285	9,024	**8,815**
150	Fan speed (rpm)	1,258	1,242	1,230	1,216	1,202	1,189	1,175	1,162	1,149	1,134	1,120	1,105	1,091
	Power input (W)	6,736	6,565	6,360	6,158	5,820	5,611	5,401	5,180	4,958	4,769	4,579	4,327	4,141
	Air flow (CFM)	10,287	10,132	10,049	9,952	9,818	9,692	9,566	9,395	9,224	9,069	8,915	8,599	8,418

Continued: MRC-200HWN1-R(C)

ESP	N	0	0.25	0.5	0.75	1	1.25	1.5	1.75	2	2.25	2.5	2.75	3
(Pa)	X	0.5	1	1.5	2	2.5	3	3.5	4	4.5	5	5.5	6	6.5
175	Fan speed (rpm)	1,261	1,244	1,232	1,218	1,204	1,190	1,177	1,163	1,149	1,135	1,121	1,106	1,093
	Power input (W)	6,511	6,332	6,169	5,929	5,607	5,391	5,175	4,953	4,731	4,545	4,358	4,107	3,925
	Air flow (CFM)	10,042	9,864	9,794	9,650	9,524	9,377	9,231	9,046	8,861	8,699	8,537	8,243	8,045
200	Fan speed (rpm)	1,263	1,245	1,233	1,221	1,205	1,192	1,179	1,164	1,150	1,136	1,123	1,106	1,094
	Power input (W)	6,285	6,099	5,977	5,700	5,394	5,172	4,949	4,727	4,504	4,321	4,137	3,887	3,709
	Air flow (CFM)	9,798	9,597	9,540	9,347	9,230	9,063	8,896	8,697	8,497	8,328	8,158	7,887	7,672
225	Fan speed (rpm)	1,264	1,248	1,235	1,222	1,207	1,194	1,181	1,166	1,152	1,138	1,124	1,110	1,096
	Power input (W)	6,046	5,871	5,696	5,451	5,160	4,923	4,686	4,461	4,237	4,049	3,861	3,624	3,433
	Air flow (CFM)	9,505	9,301	9,183	9,019	8,877	8,693	8,508	8,291	8,074	7,871	7,669	7,387	7,138
250	Fan speed (rpm)	1,265	1,251	1,237	1,224	1,209	1,196	1,183	1,169	1,154	1,140	1,126	1,113	1,099
	Power input (W)	5,807	5,643	5,415	5,201	4,925	4,674	4,422	4,196	3,969	3,777	3,585	3,361	3,157
	Air flow (CFM)	9,212	9,004	8,826	8,691	8,524	8,322	8,120	7,885	7,650	7,415	7,180	6,887	6,605
275	Fan speed (rpm)	1,267	1,253	1,239	1,226	1,211	1,198	1,185	1,171	1,157	1,144	1,130	1,117	1,094
	Power input (W)	5,523	5,350	5,120	4,872	4,585	4,322	4,059	3,812	3,564	3,331	3,098	2,800	2,662
	Air flow (CFM)	8,831	8,594	8,380	8,204	8,010	7,740	7,470	7,173	6,876	6,487	6,099	5,562	5,395
300	Fan speed (rpm)	1,269	1,254	1,242	1,228	1,213	1,201	1,188	1,174	1,160	1,147	1,134	1,120	1,088
	Power input (W)	5,238	5,056	4,825	4,542	4,245	3,971	3,696	3,428	3,159	2,885	2,611	2,239	2,167
	Air flow (CFM)	8,450	8,184	7,933	7,717	7,495	7,157	6,819	6,460	6,102	5,560	5,018	4,237	4,186
325	Fan speed (rpm)	1,272	1,258	1,245	1,233	1,218	1,206	1,193	/	/	/	/	/	/
	Power input (W)	4,892	4,650	4,334	3,987	3,707	3,334	2,961	/	/	/	/	/	/
	Air flow (CFM)	7,955	7,559	7,136	6,775	6,406	5,820	5,234	/	/	/	/	/	/

Continued: MRC-200HWN1-R(C)

ESP	N	0	0.25	0.5	0.75	1	1.25	1.5	1.75	2	2.25	2.5	2.75	3
(Pa)	X	0.5	1	1.5	2	2.5	3	3.5	4	4.5	5	5.5	6	6.5
350	Fan speed (rpm)	1,276	1,262	1,248	1,235	1,223	/	/	/	/	/	/	/	/
	Power input (W)	4,546	4,243	3,842	3,731	3,169	/	/	/	/	/	/	/	/
	Air flow (CFM)	7,459	6,935	6,339	6,285	5,318	/	/	/	/	/	/	/	/
375	Fan speed (rpm)	1,280	1,267	1,254	/	/	/	/	/	/	/	/	/	/
	Power input (W)	3,982	3,457	3,371	/	/	/	/	/	/	/	/	/	/
	Air flow (CFM)	6,465	5,433	5,387	/	/	/	/	/	/	/	/	/	/
400	Fan speed (rpm)	1,284	/	/	/	/	/	/	/	/	/	/	/	/
	Power input (W)	3,417	/	/	/	/	/	/	/	/	/	/	/	/
	Air flow (CFM)	5,471	/	/	/	/	/	/	/	/	/	/	/	/

Notes:

1. Legend: X – Regulation space of motor pulley (mm); N: Number of turns; ESP: External static pressure (Pa);

2: Pulley pitch factory set point: The table, No. of turns (N) = 5;

3. Bold data is the performance testing set point;

4. Shading data are rated airflow.

MRC-250HWN1-R(C)

ESP	N	0	0.25	0.5	0.75	1	1.25	1.5	1.75	2	2.25	2.5	2.75	3
(Pa)	X	0.5	1	1.5	2	2.5	3	3.5	4	4.5	5	5.5	6	6.5
0	Fan speed (rpm)	1,075	1,059	1,044	1,034	1,026	1,009	1,002	985	973	963	934	939	925
	Power input (W)	6,962	6,840	6,589	6,382	6,068	5,930	5,651	5,544	5,232	5,085	4,765	4,893	4,734
	Air flow (CFM)	12,304	12,345	12,115	12,068	11,907	11,717	11,587	11,472	11,269	11,177	10,868	10,894	10,757
25	Fan speed (rpm)	1,075	1,060	1,041	1,035	1,027	1,010	1,003	986	974	964	935	939	926
	Power input (W)	6,750	6,663	6,363	6,203	5,914	5,736	5,487	5,374	5,065	4,905	4,632	4,740	4,597
	Air flow (CFM)	12,052	12,092	11,849	11,797	11,645	11,431	11,322	11,191	10,982	10,879	10,572	10,610	10,471
50	Fan speed (rpm)	1,074	1,061	1,038	1,036	1,028	1,011	1,004	987	975	965	936	940	927
	Power input (W)	6,538	6,485	6,137	6,023	5,759	5,541	5,323	5,203	4,898	4,724	4,498	4,587	4,459
	Air flow (CFM)	11,801	11,838	11,583	11,527	11,383	11,144	11,058	10,909	10,695	10,581	10,276	10,326	10,185
75	Fan speed (rpm)	1,075	1,062	1,040	1,036	1,029	1,011	1,004	987	976	966	937	941	928
	Power input (W)	6,391	6,301	5,903	5,842	5,573	5,329	5,152	5,019	4,698	4,524	4,304	4,410	4,282
	Air flow (CFM)	11,575	11,558	11,249	11,218	11,055	10,820	10,745	10,585	10,345	10,217	9,914	9,964	9,825
100	Fan speed (rpm)	1,075	1,063	1,041	1,036	1,030	1,012	1,005	988	977	967	937	942	928
	Power input (W)	6,243	6,117	5,668	5,660	5,387	5,116	4,980	4,834	4,498	4,324	4,110	4,233	4,104
	Air flow (CFM)	11,350	11,278	10,915	10,910	10,728	10,496	10,432	10,260	9,995	9,853	9,552	9,602	9,465
125	Fan speed (rpm)	1,076	1,063	1,044	1,037	1,030	1,013	1,005	989	979	968	938	943	929
	Power input (W)	6,089	5,904	5,425	5,441	5,178	4,900	4,790	4,626	4,292	4,114	3,928	4,040	3,911
	Air flow (CFM)	11,019	10,945	10,566	10,567	10,361	10,123	10,054	9,870	9,598	9,432	9,155	9,168	9,021
150	Fan speed (rpm)	1,077	1,063	**1,047**	1,037	1,031	1,015	1,005	990	980	969	939	944	930
	Power input (W)	5,934	5,690	**5,181**	5,222	4,969	4,683	4,600	4,418	4,085	3,904	3,746	3,846	3,717
	Air flow (CFM)	10,688	10,612	**10,217**	10,224	9,994	9,749	9,677	9,480	9,201	9,010	8,758	8,735	8,577

Continued: MRC-250HWN1-R(C)

ESP	N	0	0.25	0.5	0.75	1	1.25	1.5	1.75	2	2.25	2.5	2.75	3
(Pa)	X	0.5	1	1.5	2	2.5	3	3.5	4	4.5	5	5.5	6	6.5
175	Fan speed (rpm)	1,077	1,064	1,047	1,038	1,032	1,015	1,006	991	981	969	939	944	931
	Power input (W)	5,613	5,449	4,984	4,995	4,746	4,455	4,382	4,203	3,862	3,683	3,548	3,645	3,512
	Air flow (CFM)	10,300	10,229	9,839	9,828	9,590	9,294	9,245	9,031	8,703	8,496	8,259	8,225	8,064
200	Fan speed (rpm)	1,078	1,065	1,048	1,039	1,033	1,016	1,006	992	982	969	940	945	932
	Power input (W)	5,292	5,207	4,786	4,768	4,522	4,226	4,163	3,987	3,638	3,462	3,349	3,443	3,307
	Air flow (CFM)	9,913	9,847	9,462	9,432	9,186	8,838	8,812	8,581	8,206	7,983	7,760	7,715	7,551
225	Fan speed (rpm)	1,079	1,066	1,051	1,040	1,034	1,017	1,007	993	983	970	941	946	932
	Power input (W)	5,294	4,968	4,527	4,522	4,299	3,990	3,958	3,758	3,408	3,240	3,135	3,203	3,078
	Air flow (CFM)	9,875	9,378	8,936	8,922	8,670	8,306	8,296	8,037	7,615	7,383	7,169	7,025	6,863
250	Fan speed (rpm)	1,080	1,067	1,053	1,042	1,034	1,018	1,008	994	984	970	942	947	933
	Power input (W)	5,295	4,728	4,267	4,275	4,076	3,753	3,753	3,528	3,177	3,018	2,921	2,962	2,849
	Air flow (CFM)	9,837	8,910	8,410	8,412	8,154	7,775	7,780	7,492	7,024	6,784	6,578	6,335	6,175
275	Fan speed (rpm)	1,082	1,068	1,050	1,042	1,035	1,019	1,009	995	985	971	942	948	934
	Power input (W)	4,879	4,488	4,013	4,034	3,825	3,496	3,486	3,341	2,975	2,803	2,717	2,792	2,530
	Air flow (CFM)	8,972	8,391	7,852	7,864	7,575	7,096	7,053	6,824	6,335	5,996	5,844	5,744	5,204
300	Fan speed (rpm)	1,084	1,070	1,047	1,043	1,035	1,021	1,010	995	986	973	943	949	935
	Power input (W)	4,463	4,248	3,759	3,793	3,574	3,239	3,219	3,153	2,773	2,587	2,512	2,621	2,210
	Air flow (CFM)	8,107	7,871	7,293	7,316	6,996	6,418	6,325	6,156	5,647	5,209	5,110	5,152	4,234
325	Fan speed (rpm)	1,084	1,072	1,054	1,046	1,036	1,023	1,010	997	986	/	/	/	/
	Power input (W)	4,219	3,996	3,636	3,538	3,313	3,089	3,219	2,818	2,773	/	/	/	/
	Air flow (CFM)	7,663	7,324	6,813	6,603	6,221	5,896	6,325	5,316	5,647	/	/	/	/

Continued: MRC-250HWN1-R(C)

ESP	N	0	0.25	0.5	0.75	1	1.25	1.5	1.75	2	2.25	2.5	2.75	3
(Pa)	X	0.5	1	1.5	2	2.5	3	3.5	4	4.5	5	5.5	6	6.5
350	Fan speed (rpm)	1,085	1,073	1,061	1,050	1,038	1,025	1,011	/	/	/	/	/	/
	Power input (W)	3,975	3,744	3,513	3,282	3,051	2,940	3,024	/	/	/	/	/	/
	Air flow (CFM)	7,219	6,776	6,332	5,889	5,445	5,375	5,815	/	/	/	/	/	/
375	Fan speed (rpm)	1,087	1,074	1,062	/	/	/	/	/	/	/	/	/	/
	Power input (W)	3,708	3,474	3,241	/	/	/	/	/	/	/	/	/	/
	Air flow (CFM)	6,428	5,990	5,551	/	/	/	/	/	/	/	/	/	/
400	Fan speed (rpm)	1,088	/	/	/	/	/	/	/	/	/	/	/	/
	Power input (W)	3,440	/	/	/	/	/	/	/	/	/	/	/	/
	Air flow (CFM)	5,637	/	/	/	/	/	/	/	/	/	/	/	/

Notes:

1. Legend: X – Regulation space of motor pulley (mm); N: Number of turns; ESP: External static pressure (Pa);

2: Pulley pitch factory set point: The table, No. of turns (N) = 5;

3. Bold data is the performance testing set point;

4. Shading data are rated airflow.

MRC-300HWN1-R(C)

ESP	N	0	0.25	0.5	0.75	1	1.25	1.5	1.75	2	2.25	2.5	2.75	3
(Pa)	X	0.5	1	1.5	2	2.5	3	3.5	4	4.5	5	5.5	6	6.5
0	Fan speed (rpm)	/	/	/	/	/	/	/	/	/	/	/	/	/
	Power input (W)	/	/	/	/	/	/	/	/	/	/	/	/	/
	Air flow (CFM)	/	/	/	/	/	/	/	/	/	/	/	/	/
25	Fan speed (rpm)	/	/	/	/	/	/	/	/	/	/	/	/	1,065
	Power input (W)	/	/	/	/	/	/	/	/	/	/	/	/	7,695
	Air flow (CFM)	/	/	/	/	/	/	/	/	/	/	/	/	12,337
50	Fan speed (rpm)	/	/	/	/	/	/	/	/	/	/	1,077	1,072	1,067
	Power input (W)	/	/	/	/	/	/	/	/	/	/	7,522	7,494	7,465
	Air flow (CFM)	/	/	/	/	/	/	/	/	/	/	12,080	12,026	11,973
75	Fan speed (rpm)	/	/	/	/	/	/	/	/	/	1,100	1,078	1,073	1,068
	Power input (W)	/	/	/	/	/	/	/	/	/	7,529	7,243	7,226	7,210
	Air flow (CFM)	/	/	/	/	/	/	/	/	/	11,986	11,733	11,681	11,629
100	Fan speed (rpm)	/	/	/	/	/	/	/	/	1,123	1,101	1,079	1,074	1,069
	Power input (W)	/	/	/	/	/	/	/	/	7,528	7,246	6,963	6,959	6,955
	Air flow (CFM)	/	/	/	/	/	/	/	/	11,909	11,647	11,386	11,334	11,283
125	Fan speed (rpm)	/	/	/	/	/	/	1,155	1,140	1,126	1,103	1,081	1,076	1,071
	Power input (W)	/	/	/	/	/	/	7,992	7,627	7,263	6,997	6,731	6,718	6,705
	Air flow (CFM)	/	/	/	/	/	/	12,092	11,819	11,547	11,283	11,018	10,938	10,858
150	Fan speed (rpm)	/	/	/	/	/	1,185	1,156	1,142	1,128	1,105	1,083	1,078	1,073
	Power input (W)	/	/	/	/	/	8,065	7,755	7,376	6,997	6,748	6,498	6,477	6,455
	Air flow (CFM)	/	/	/	/	/	11,452	11,758	11,471	11,184	10,917	10,650	10,540	10,431

Continued: MRC-300HWN1-R(C)

ESP	N	0	0.25	0.5	0.75	1	1.25	1.5	1.75	2	2.25	2.5	2.75	3
(Pa)	X	0.5	1	1.5	2	2.5	3	3.5	4	4.5	5	5.5	6	6.5
175	Fan speed (rpm)	/	/	/	1,195	1,187	1,187	1,158	1,144	1,130	1,107	1,084	1,080	1,075
	Power input (W)	/	/	/	8,733	8,411	8,411	7,452	7,068	6,684	6,453	6,221	6,195	6,169
	Air flow (CFM)	/	/	/	12,095	11,973	11,973	11,335	11,006	10,676	10,406	10,136	10,017	9,898
200	Fan speed (rpm)	/	/	1,202	1,196	1,189	1,189	1,159	1,145	1,132	1,109	1,086	1,081	1,076
	Power input (W)	/	/	9,043	8,400	8,096	8,096	7,149	6,760	6,372	6,158	5,944	5,913	5,882
	Air flow (CFM)	/	/	12,246	11,676	11,579	11,579	10,912	10,539	10,167	9,893	9,620	9,491	9,363
225	Fan speed (rpm)	/	1,216	1,208	1,202	1,195	1,195	1,165	1,152	1,139	1,115	1,092	1,087	1,082
	Power input (W)	/	9,186	8,773	8,123	7,813	7,813	6,853	6,448	6,044	5,844	5,644	5,602	5,560
	Air flow (CFM)	/	12,019	11,919	11,323	11,201	11,201	10,482	10,059	9,636	9,359	9,082	8,892	8,702
250	Fan speed (rpm)	/	1,224	1,215	1,208	1,201	1,201	1,171	1,158	1,145	1,122	1,098	1,093	1,089
	Power input (W)	/	8,973	8,502	7,840	7,529	7,529	6,556	6,137	5,718	5,532	5,346	5,293	5,241
	Air flow (CFM)	/	11,745	11,592	10,883	10,822	10,822	10,052	9,577	9,102	8,822	8,541	8,288	8,035
275	Fan speed (rpm)	1,239	1,229	**1,220**	1,211	1,202	1,202	1,173	1,160	1,147	1,123	1,099	1,094	1,090
	Power input (W)	9,691	8,816	**8,296**	7,623	7,310	7,310	6,324	5,951	5,577	5,388	5,199	5,063	4,926
	Air flow (CFM)	12,157	11,437	**11,299**	10,479	10,359	10,359	9,419	8,964	8,508	8,196	7,884	7,478	7,072
300	Fan speed (rpm)	1,240	1,233	1,224	1,217	1,208	1,208	1,180	1,167	1,154	1,130	1,106	/	/
	Power input (W)	9,304	8,436	7,901	7,272	6,911	6,911	5,920	5,592	5,265	5,073	4,881	/	/
	Air flow (CFM)	11,832	11,070	10,815	10,050	9,757	9,757	8,700	8,263	7,827	7,481	7,136	/	/
325	Fan speed (rpm)	1,240	1,233	1,224	1,217	1,208	1,193	1,179	/	/	/	/	/	/
	Power input (W)	9,243	8,406	7,901	7,304	6,975	6,512	6,049	/	/	/	/	/	/
	Air flow (CFM)	11,798	11,053	10,815	10,067	9,792	9,281	8,769	/	/	/	/	/	/

Continued: MRCT-300CWN1-R(C)

ESP	N	0	0.25	0.5	0.75	1	1.25	1.5	1.75	2	2.25	2.5	2.75	3
(Pa)	X	0.5	1	1.5	2	2.5	3	3.5	4	4.5	5	5.5	6	6.5
350	Fan speed (rpm)	1,251	1,245	1,234	1,227	1,217	1,203	1,188	/	/	/	/	/	/
	Power input (W)	8,379	7,287	7,097	6,397	6,236	5,805	5,375	/	/	/	/	/	/
	Air flow (CFM)	10,450	9,177	9,502	8,473	8,514	8,019	7,525	/	/	/	/	/	/
375	Fan speed (rpm)	1,256	1,248	1,238	1,229	1,220	1,205	1,191	/	/	/	/	/	/
	Power input (W)	8,154	7,170	6,637	6,162	5,957	5,617	5,277	/	/	/	/	/	/
	Air flow (CFM)	10,114	8,976	8,637	8,007	7,913	7,551	7,189	/	/	/	/	/	/
400	Fan speed (rpm)	1,261	1,252	1,242	1,232	1,223	1,208	1,193	/	/	/	/	/	/
	Power input (W)	7,929	7,053	6,176	5,927	5,677	5,428	5,178	/	/	/	/	/	/
	Air flow (CFM)	9,777	8,775	7,772	7,542	7,312	7,083	6,853	/	/	/	/	/	/

Notes:

1. Legend: X – Regulation space of motor pulley (mm); N: Number of turns; ESP: External static pressure (Pa);

2: Pulley pitch factory set point: The table, No. of turns (N) = 5;

3. Bold data is the performance testing set point;

4. Shading data are rated airflow.

8. Refrigerant cycle diagram

MRC-062HWN1-R(C), MRC-075HWN1-R(C):

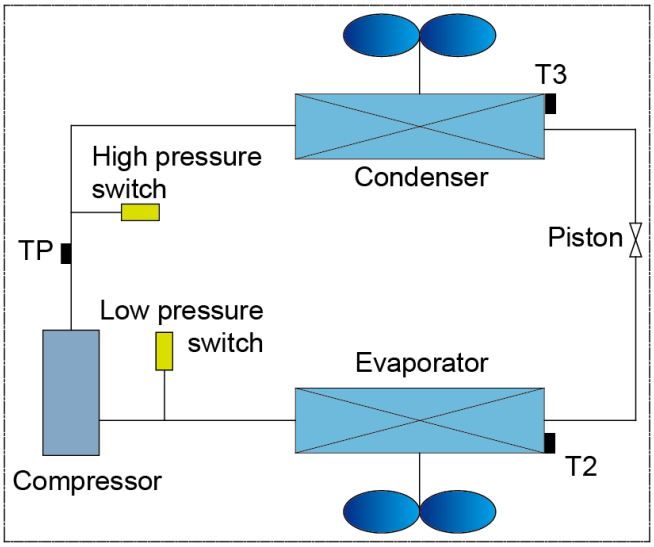

MRC-085HWN1-R(C), MRC-100HWN1-R(C), MRC-125HWN1-R(C), MRC-150HWN1-R(C), MRC-175HWN1-R(C), MRC-200HWN1-R(C):

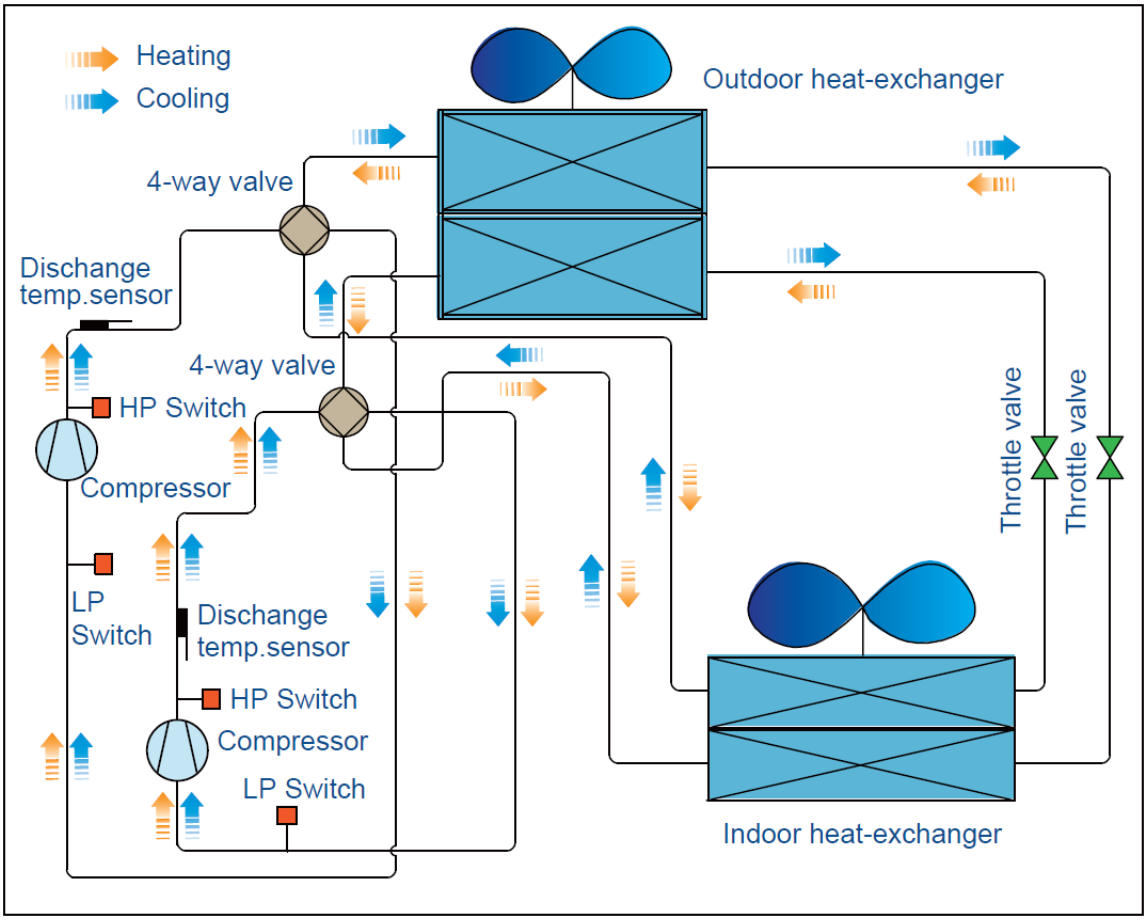

MRC-250HWN1(C), MRC-300HWN1(C):

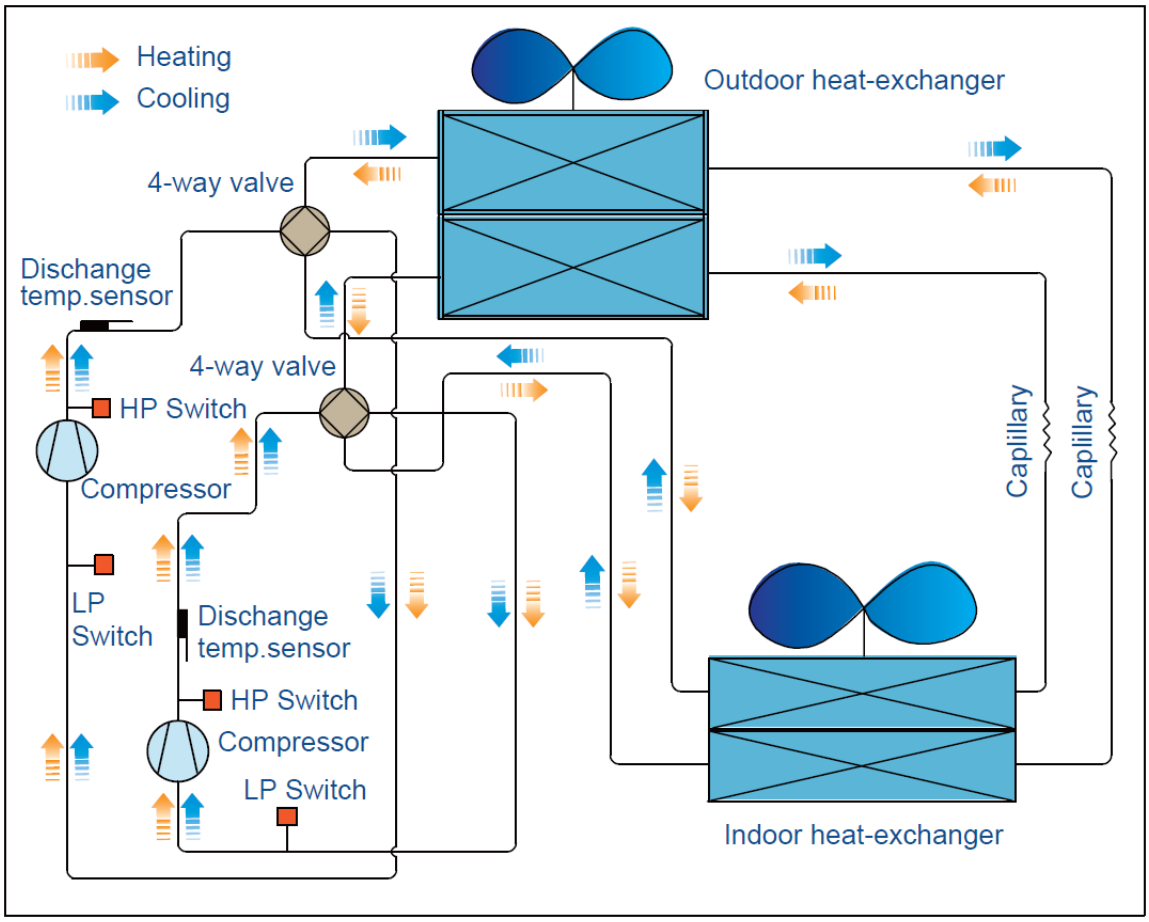

9. Operation limits

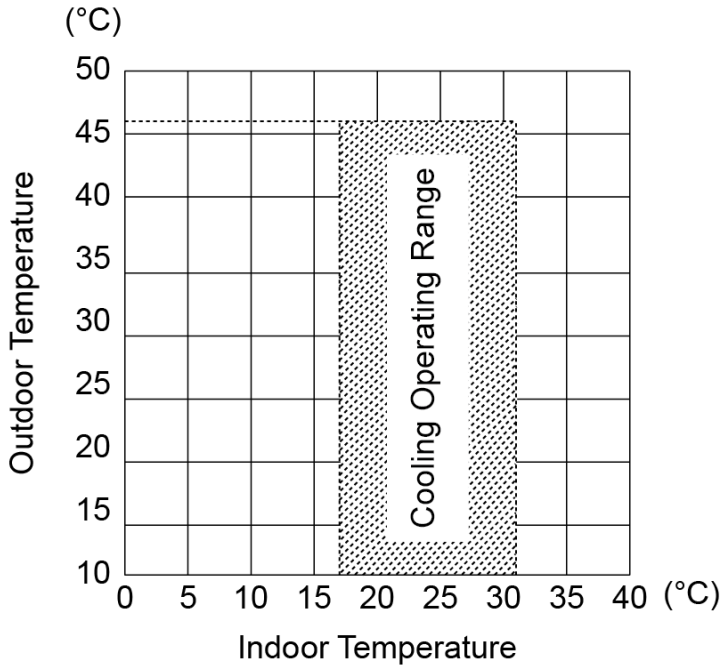

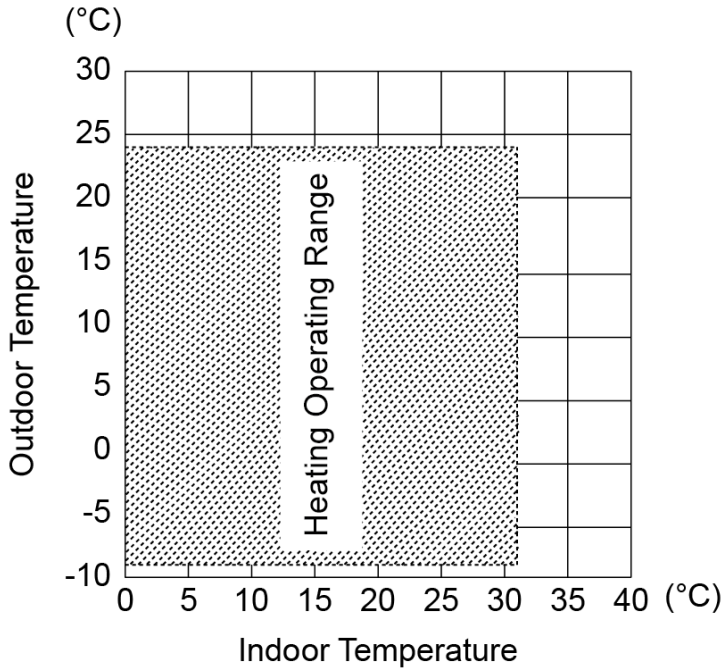

	Outdoor temperature	**Indoor temperature**
Cooling only mode	10°C - 46°C	17°C - 31°C
Heating mode	-9°C - 24°C	10°C - 31°C

Room relative humidity should be less than 80%. If the unit operates in excess, the surface of the unit may attract condensation.

10. Noise Criteria (NC) Curves

MRC-062HWN1-R(C):

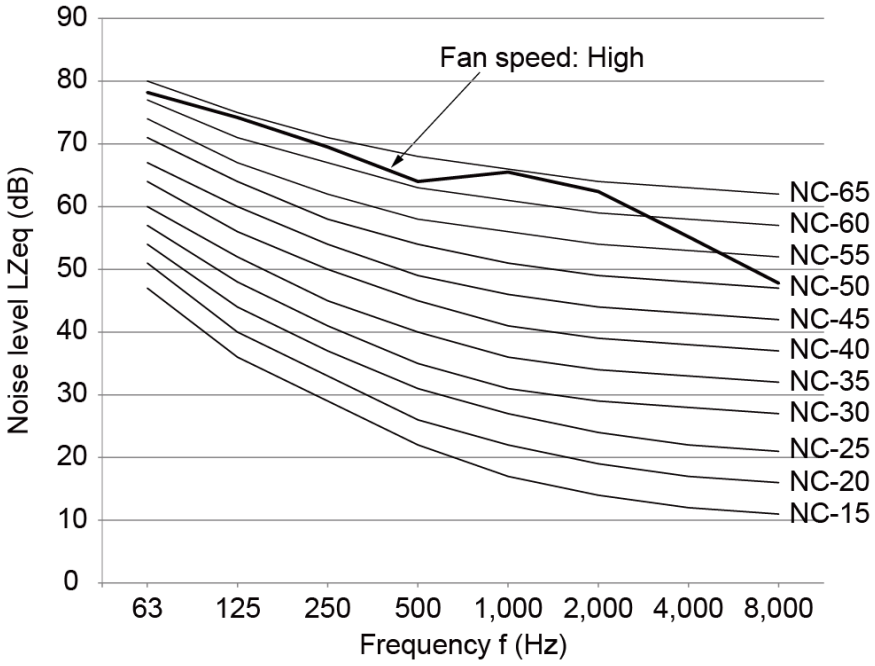

MRC-075HWN1-R(C):

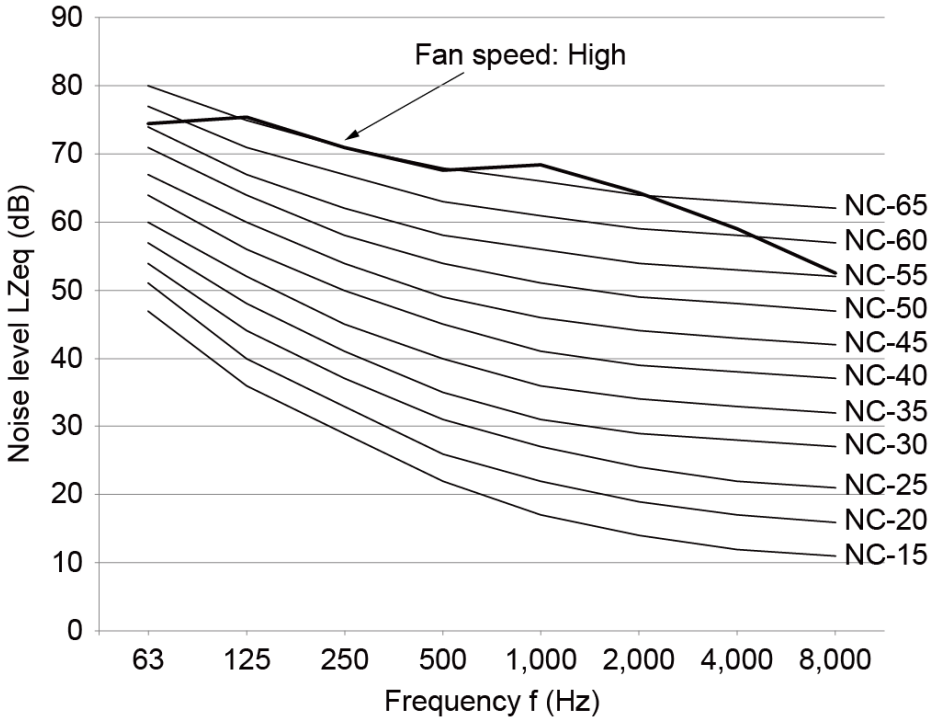

MRC-085HWN1-R(C):

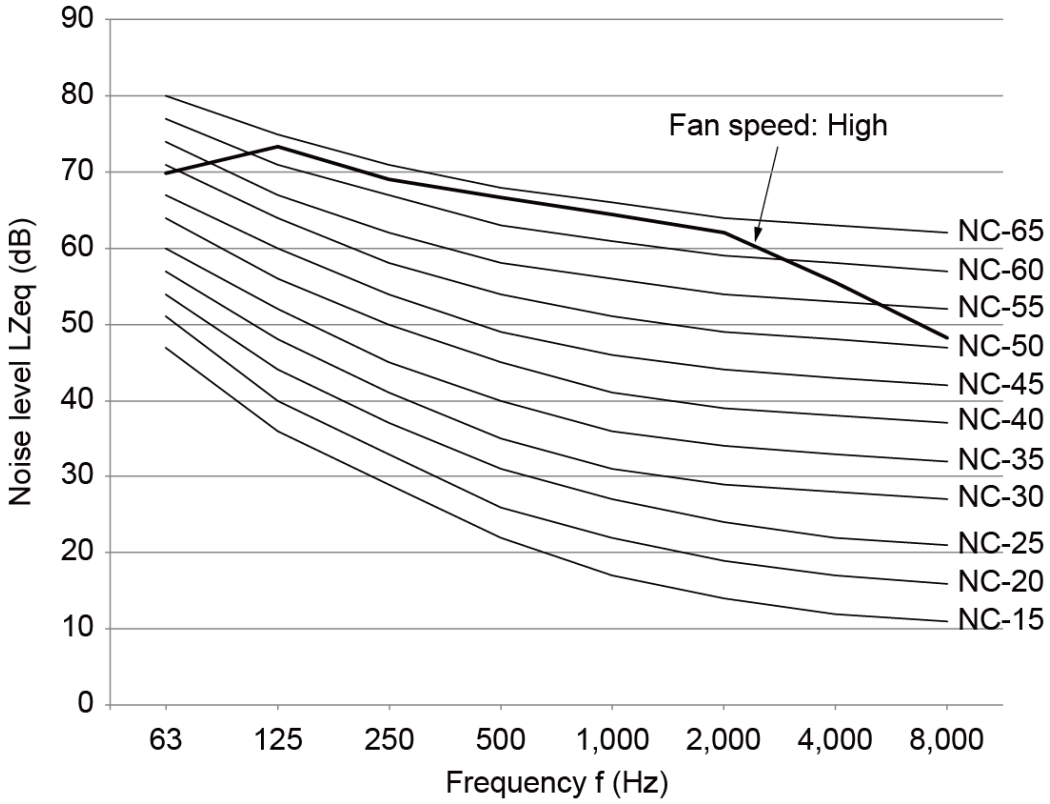

MRC-100HWN1-R(C):

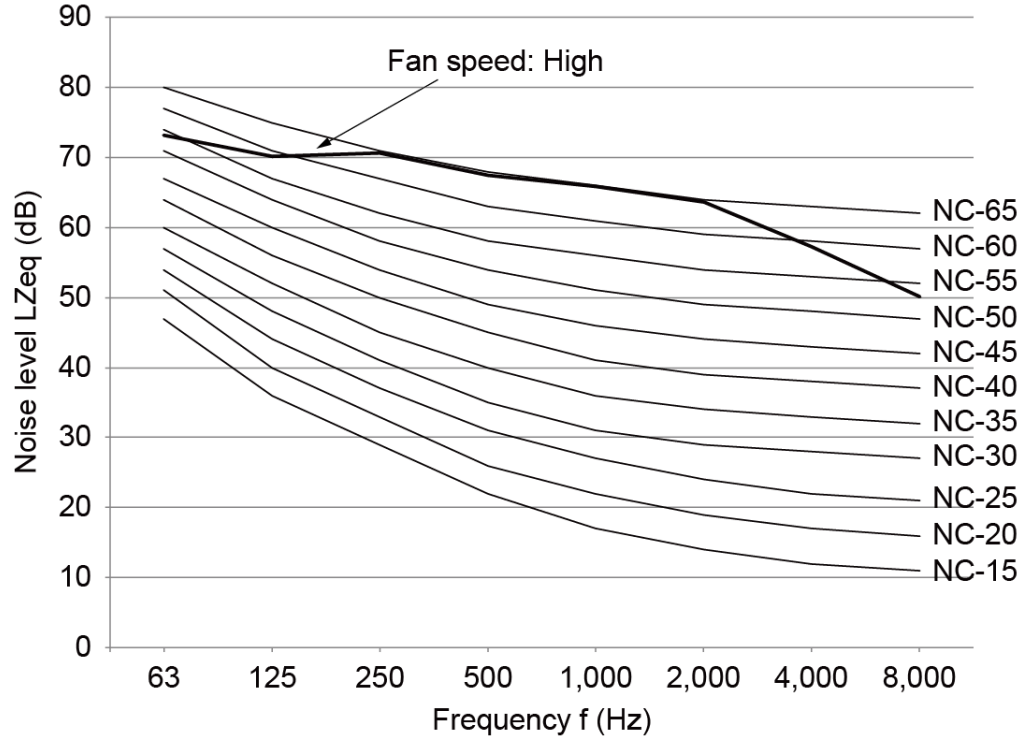

MRC-125HWN1-R(C):

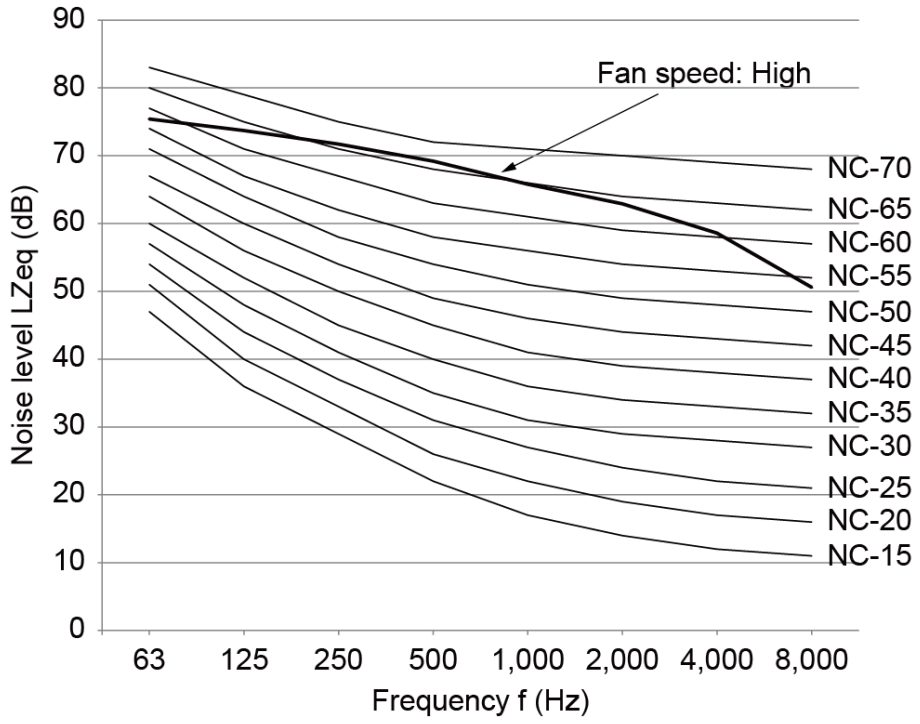

MRC-150HWN1-R(C):

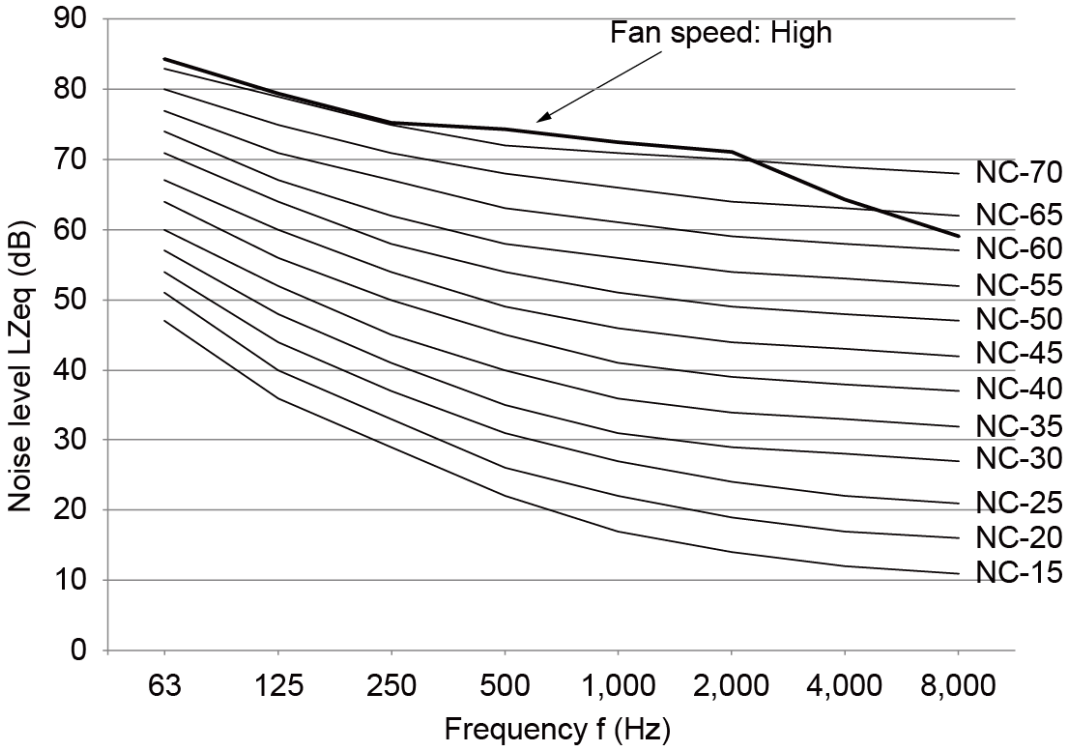

MRC-175HWN1-R(C):

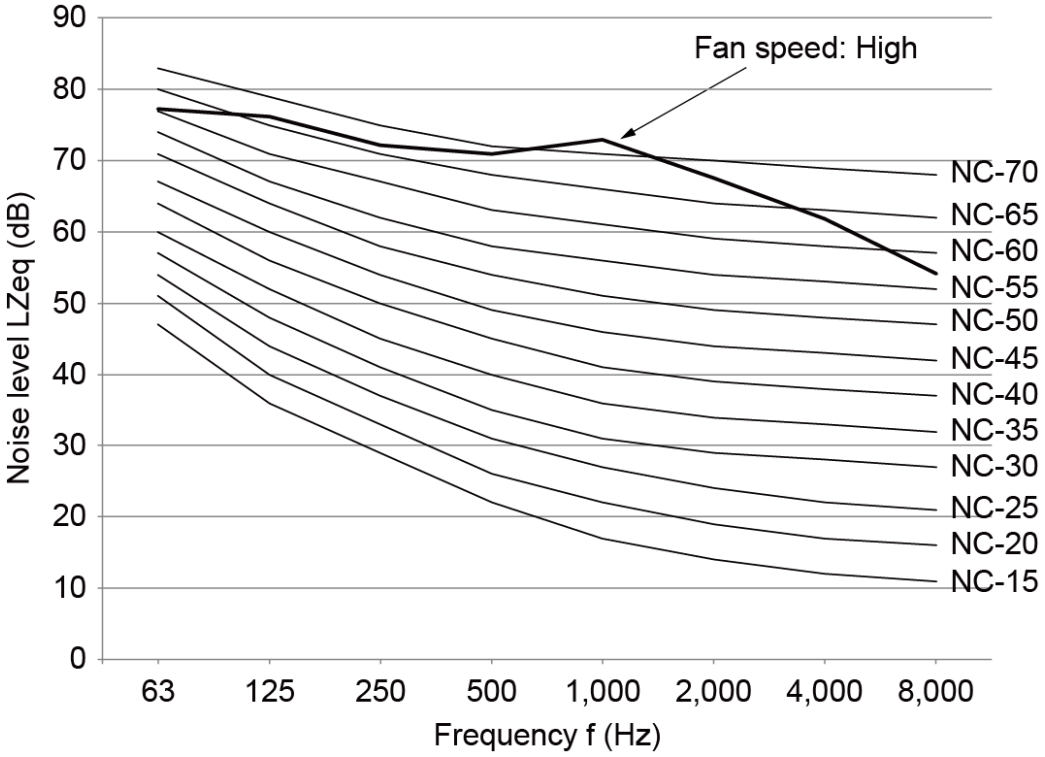

MRC-200HWN1-R(C):

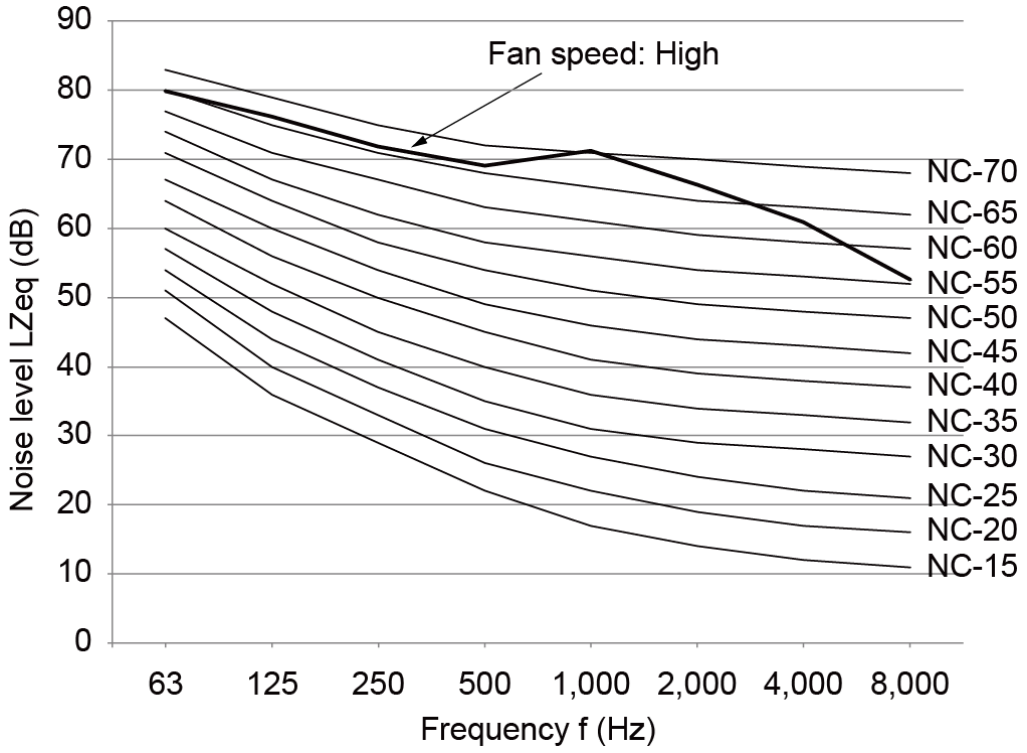

MRC-250HWN1-R(C):

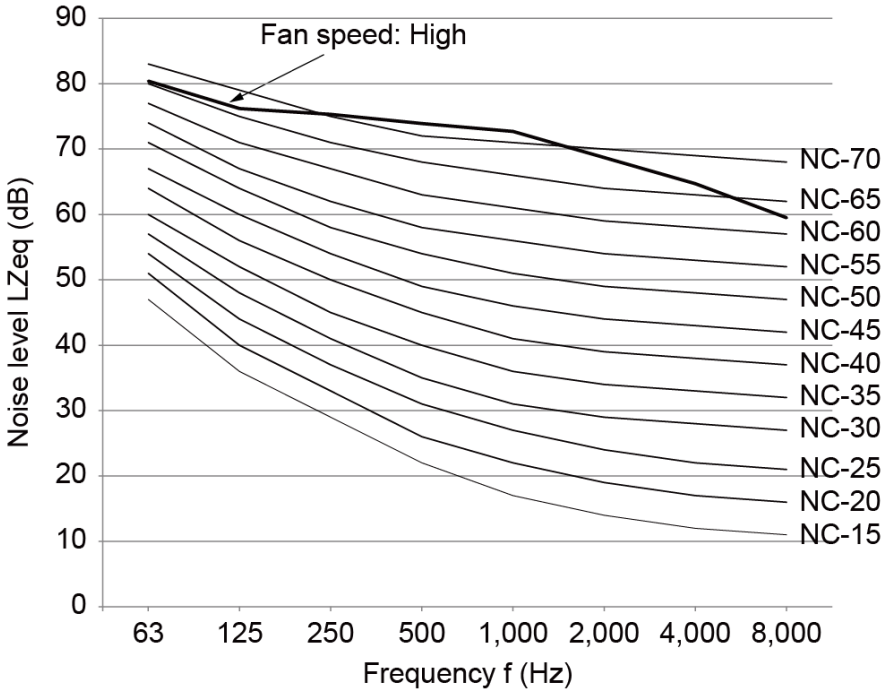

MRCT-300CWN1-R(C):

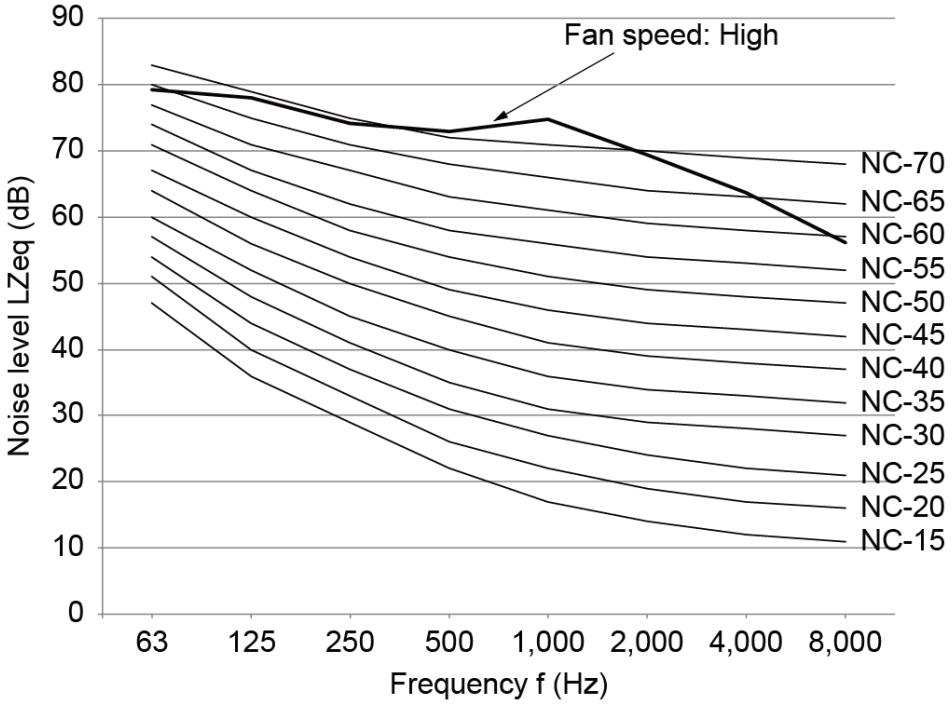

11. Accessories

Item	Quantity	Shape
User manual	1	----------
Drain outlet	1	
Snap ring	1	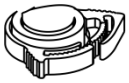
Drain pipe	1	
Wired controller & wires	1	

Part. 3 Installations

1. General information 105

2. Recommendations 106

3. Lifting 107

4. Installation 108

5. Condensate drainage 109

6. Duct work 110

7. Electrical wiring 110

8. Start-up 113

9. Safety control 114

10. Maintenance 123

Appendix: - Temperature sensor 126

1. General information

Warning and cautions appear at appropriate locations throughout this manual. Read these carefully, please.

Caution:

- ✧ Read this entire manual before beginning installation procedures.
- ✧ Body injury can result from high voltage electrical components, fast moving fans. For protection from these inherent hazards during installation and servicing, the electrical supply must be disconnected.
- ✧ If operating checks must be performed with the unit operating, it is the technicians responsibility to recognize these hazards and proceed safely.

Warning:

- ✧ Never replace a fuse with that of wrong rated current or other wires when a fuse blows out. Use of wire or copper wire may cause the unit to break down or cause a fire.
- ✧ Do not insert fingers, rods or other objects into the air inlet or outlet. When the fan is rotating at high speed, it will cause injury.
- ✧ Never use a flammable spray such as hair spray, lacquer or paint near the unit. It may cause a fire.
- ✧ Keep far away from high-frequency equipment. Also, keep away from the following places:
  A place where it is full of oil, gas; Places where salty air surrounding (near the coast); A place where is caustic gas (the sulfide in hot spring); Location in above places may cause malfunction or shorten the life span of the machine.
- ✧ In the case of extremely strong wind, please prevent the air from flowing backwards into the outside.
- ✧ Snow canopy is necessary in snowfall places on the outside.
- ✧ In the frequent thunderstruck place, lighting proof action should be taken.
- ✧ The refrigerant in the air conditioner is safe and normally does not leak.
- ✧ The temperature of refrigerant circuit will be high, please keep the interconnection cable away from the copper tube.
- ✧ The appliance should not be used by children without supervision.

2. Recommendations

2.1 Horizontal airflow application

- ✧ These units are designed and certified for outdoor installation. These units may be installed directly on wood flooring or on Class A, Class B and Class C roof covering material.
- ✧ Location of the unit must allow service clearance around it. Clearance of the unit must be given careful consideration.
- ✧ Check the handling facilities to ensure the safety of personnel and the units.
- ✧ Caution must be taken at all times to avoid personal injuries and damage to equipment.
- ✧ Unit must be mounted level for proper drainage of water through the holes in the base pan.
- ✧ Unit must not be exposed to direct roof water run-off.
- ✧ Flexible duct connectors must be of a flame retardant material. All duct work outside of the structure must be insulated and weatherproofed in accordance with local codes.
- ✧ Holes through exterior walls must be sealed in accordance with local codes.
- ✧ All fabricated outdoor ducts should be as short as possible.

2.2 Clearances

- ✧ The recommended clearances for single-unit installations reference to the following figure. These requirements are not only an important consideration when determining unit placement, but they are also essential to ensure adequate serviceability, maximum capacity, and peak operating efficiency.

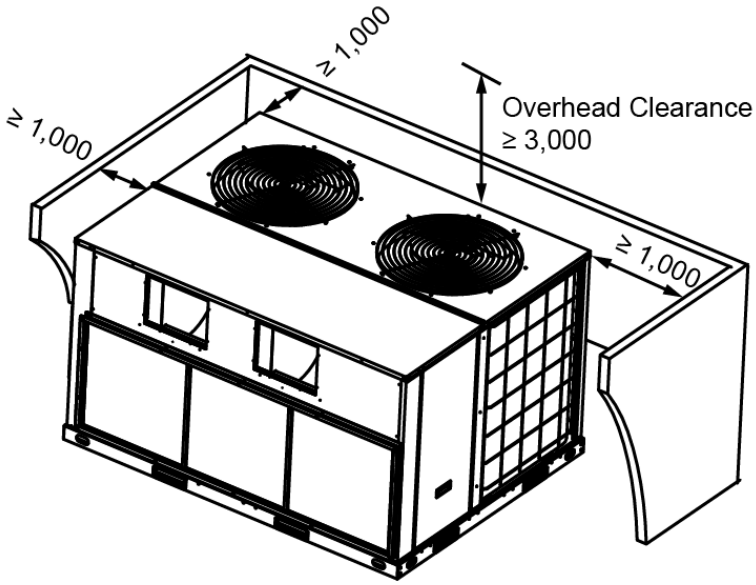

(Unit: mm)

- ✧ Any reduction of the unit clearances indicated in these pictures may result in condenser coil starvation or the recirculation of warm condenser air. Actual clearances which appear to be inadequate should be reviewed.

3. Lifting

- ✧ Rigging cables should have adequate capability to resist 3 times weight of unit. Before lift, please check and ensure that hooks are holding tightly to unit and lifting angles are no less than 60°.
- ✧ Cloth material or hard-paper should be padded in the contact place between unit and rigging cable. Rigging cable should be entwined a round at the hook for prevent danger by cable slip because of weight unbalance.
- ✧ During lifting, anyone forbidden lingering under the lifting unit.

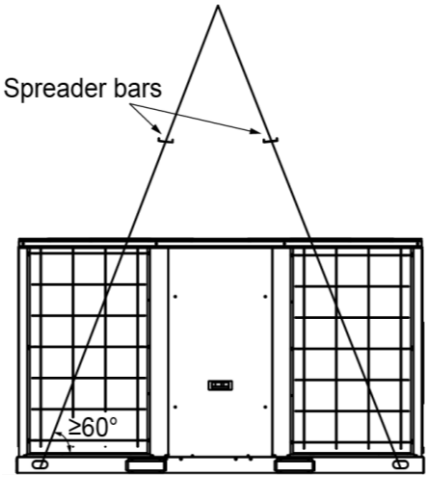

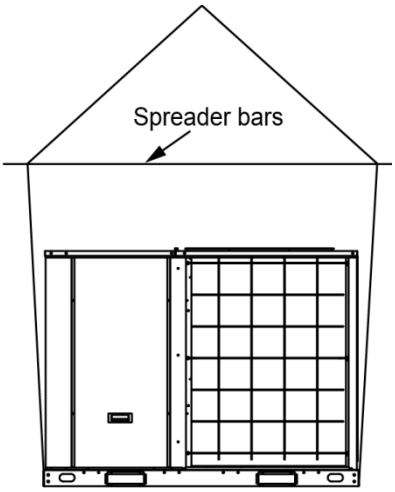

4. Installation

4.1 For roof top applications using a field fabricated frame and ducts:

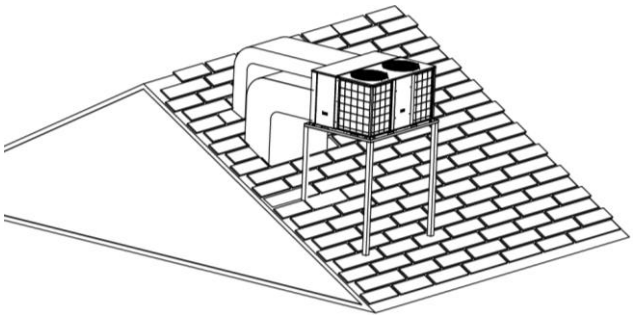

- ✧ The frame must be located and secured by bolting or welding to the roof. Flashing is required.
- ✧ The hole in the roof must be prepared in advance of installing the unit.
- ✧ Secure the ducts to the roof.
- ✧ Place the unit to the frame or roof curb.
- ✧ Insulate any ductwork outside of the structure with at least 2 inches of insulation and then weatherproof. There must be a weatherproof seal where the duct enters the structure.
- ✧ Complete the installation according to the instructions.
- ✧ Typical rooftop application with frame.

4.2 For ground level installations:

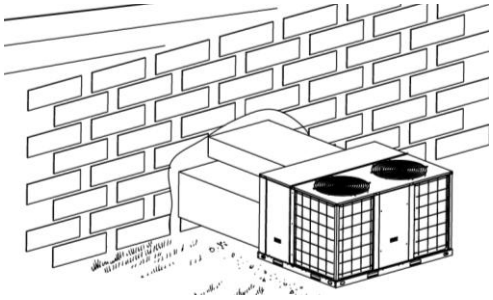

- ✧ The unit should be positioned on a pad in the size of the unit or larger. The unit must be level on the pad. The pad must not come in contact with the structure. Be sure the outdoor portion of the supply and return air ducts are as short as possible.
- ✧ Place the unit on the pad.

- ✧ Attach the supply and return air ducts to the unit.
- ✧ Insulate any ductwork outside of the structure with at least 2 inches of insulation and weatherproof. There must be a weatherproof seal where the duct enters the structure.
- ✧ Complete the installation.

5. Condensate drainage

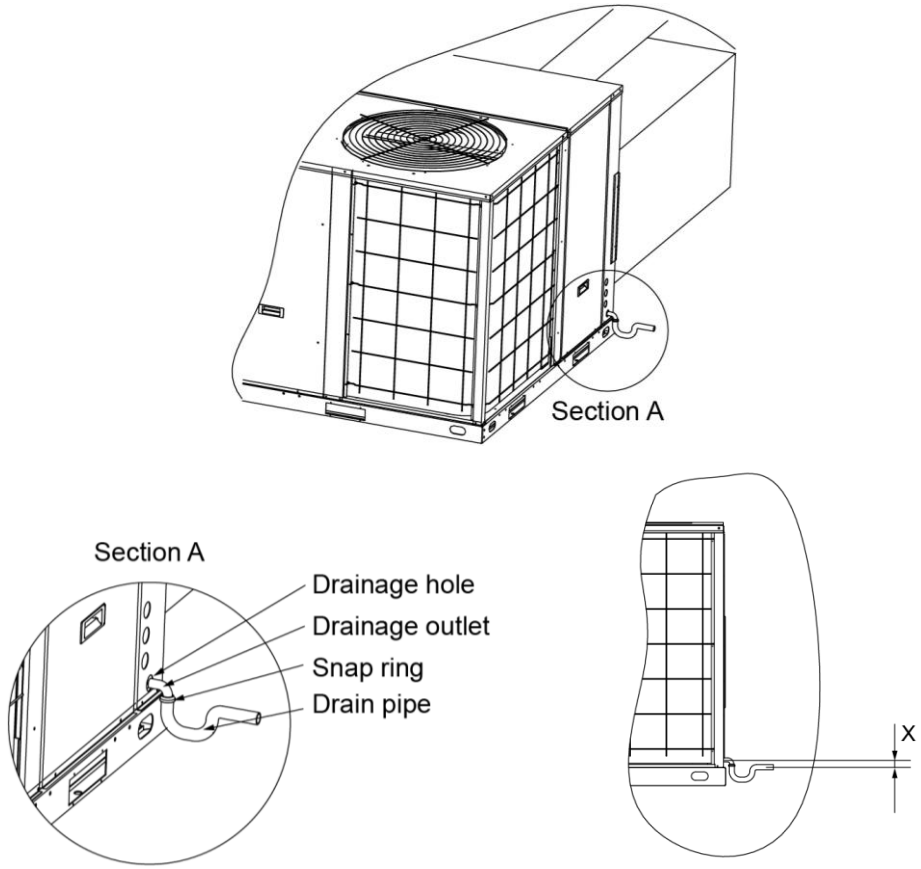

Model	X value (mm)	Model	X value (mm)
MRC-062HWN1-R(C)	20 ≤ X ≤ 40	MRC-075HWN1-R(C)	20 ≤ X ≤ 40
MRC-085HWN1-R(C)	20 ≤ X ≤ 40	MRC-100HWN1-R(C)	20 ≤ X ≤ 40
MRC-125HWN1-R(C)	20 ≤ X ≤ 40	MRC-150HWN1-R(D)	20 ≤ X ≤ 40
MRC-175HWN1-R(C)	20 ≤ X ≤ 40	MRC-200HWN1-R(C)	20 ≤ X ≤ 40
MRC-250HWN1-R(C)	20 ≤ X ≤ 40	MRC-300HWN1-R(C)	0 < X ≤ 20

6. Duct work

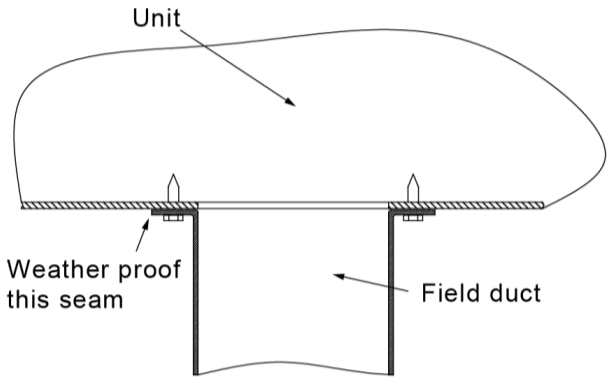

- ✧ All conditioned air ductwork should be insulated to minimize heating and cooling duct losses. Use a minimum of 2 inches of insulation with a vapor barrier. The outside ductwork must be weatherproofed between the unit and the building.
- ✧ When attaching ductwork to a horizontal unit, provide a flexible watertight connection to prevent noise transmission from the unit to the ducts. The flexible connection must be indoors and made out of heavy canvas.
- ✧ Do not draw the canvas taut between the solid ducts.
- ✧ At least 1m flame resistant layer must be laid at the end of air duct internal surface.

7. Electrical wiring

7.1 Warning

- ✧ An all-pole disconnection switch having a contact separation of at least 3mm in all poles should be connected in fixed wiring.
- ✧ The appliance shall be installed in accordance with national wiring regulations.
- ✧ An all-pole disconnection device which has at least 3mm separation distance in all pole and a residual current device (RCD) with the rating of above 10mA shall be incorporated in the fixed wiring according to the national rule.
- ✧ The appliance shall be installed in accordance with national wiring regulations.

7.2 Wiring provision

- ✧ The units are internally wired at the factory according to generally accepted electrical technology.

- ✧ Main power wiring to the unit control wiring between the control center and the unit, and earth wiring are required in the field.
- ✧ The following components are required: main power fuses; conduit coupling.
- ✧ Wire and fuse sizes should be selected in accordance with national and standard, taking the designed maximum current shall be the total of the compressor maximum current, condenser fan motor current and evaporator fan motor current.
- ✧ The wire size between the wired controller and the unit should be determined according to the following table, because the 24V power source is applied to the control circuit.

	Wiring length between wired controller and unit (One way)				
Min. wire size (mm^2)	10m	15m	20m	30m	40m
	0.5	0.5	0.75	0.75	1.0

- ✧ Main power supply parameters:

Model	Main power	Main power switch	Fuse
MRC-062HWN1-R(C)	380-415V 3Ph~ 50Hz	35A	25A
MRC-075HWN1-R(C)		40A	30A
MRC-085HWN1-R(C)		45A	35A
MRC-100HWN1-R(C)		50A	40A
MRC-125HWN1-R(C)		63A	50A
MRC-150HWN1-R(C)		75A	63A
MRC-175HWN1-R(C)		90A	80A
MRC-200HWN1-R(C)		100A	90A
MRC-250HWN1-R(C)		120A	100A
MRC-300HWN1-R(C)		120A	100A

Model	Wires for power supply	Type of wires
MRC-062HWN1-R(C)	3×6mm² + 2×3mm²	3 × UL1015 9AWG 2 × UL1015 12AWG
MRC-075HWN1-R(C)	3×10mm² + 2×6mm²	3 × UL1015 7AWG 2 × UL1015 9AWG
MRC-085HWN1-R(C)	3×10mm² + 2×6mm²	3 × UL1015 7AWG 2 × UL1015 9AWG
MRC-100HWN1-R(C)	3×10mm² + 2×6mm²	3 × UL1015 7AWG 2 × UL1015 9AWG
MRC-125HWN1-R(C)	3×16mm² + 2×10mm²	3 × UL1015 5AWG 2 × UL1015 7AWG
MRC-150HWN1-R(C)	3×16mm² + 2×10mm²	3 × UL1015 5AWG 2 × UL1015 7AWG
MRC-175HWN1-R(C)	3×25mm² + 2×10mm²	3 × UL1015 3AWG 2 × UL1015 7AWG
MRC-200HWN1-R(C)	3×25mm² + 2×10mm²	3 × UL1015 3AWG 2 × UL1015 5AWG
MRC-250HWN1-R(C)	3×35mm² + 2×16mm²	3 × UL1015 2AWG 2 × UL1015 5AWG
MRC-300HWN1-R(C)	3×35mm² + 2×16mm²	3 × UL1015 2AWG 2 × UL1015 7AWG

✧ Power supply wiring diagram

MRC-062HWN1-R(C), MRC-075HWN1-R(C):

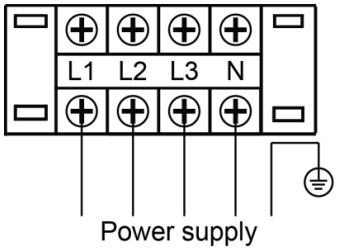

MRC-085HWN1-R(C), MRC-100HWN1-R(C),

MRC-125HWN1-R(C), MRC-150HWN1-R(C):

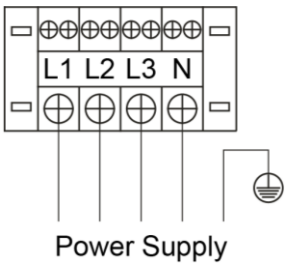

MRC-175HWN1-R(C), MRC-200HWN1-R(C),

MRC-250HWN1-R(C), MRC-300HWN1-R(C):

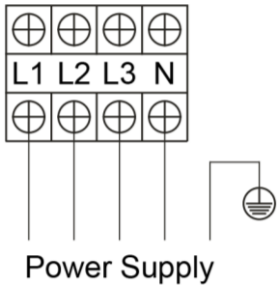

✧ Wired controller wiring diagram (Standard wired controller)

MRC-085HWN1-R(C), MRC-100HWN1-R(C), MRC-125HWN1-R(C),

MRC-150HWN1-R(C), MRC-175HWN1-R(C), MRC-200HWN1-R(C),

MRC-250HWN1-R(C), MRC-300HWN1-R(C):

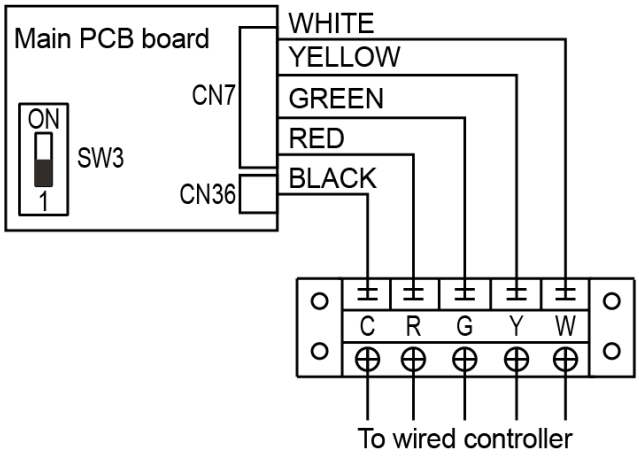

8. Start-up

Before starting unit:

✧ Is the unit properly located and level with the proper clearance?

✧ Is the duct work correctly sized, run, taped, insulated, and weatherproofed with proper unit arrangement?

✧ Is the wiring properly sized and run according to the unit wiring diagram?

✧ Are all the wiring connections tight, including those in the unit?

✧ Has the unit been properly grounded and fused with the recommended fuse size?

✧ Has the air conditioning system been checked at the service ports for charge and leak tested if necessary?

- ✧ Does the condenser fan and indoor blower fan free without rubbing, and are they tight on the shafts?
- ✧ Are all covers and access panels in place to prevent air loss and safety hazards?

Starting the unit:

- ✧ When the unit operates under cooling mode, please check the line voltage of the unit. The voltage should be within the range shown on the unit nameplate.
- ✧ If low voltage is encountered, check the size and the length of power supply wire from the mian disconnect to the unit. The line may be undersized for the length of the run.

Shut-down the unit:

- ✧ Place the system selector in the OFF position or reset thermostat (Wired controller) at a setting above room temperature.
- ✧ Do not de-energize the main power supply disconnect except when unit is to be serviced.

9. Safety control

Functions

- ✧ Minutes delay for the compressor start-up:

  At the beginning of energizing, 3-minutes delay should be taken to start the compressor. While after the stop of the compressor, 7-minutes delay should be taken to restart the compressor.
- ✧ Compressor discharge temperature protection:

  When the temperature of compressor discharge is higher than 125°C (257°F), the compressor will stop. Once the temperature is lower than 90°C (194°F), the compressor can be started again.
- ✧ Reverse phase protection relay:

  The reverse phase protection relay will make the unit not start, when the power supply source is in correctly conneted.

  The checking of phase order is just carried out at the first time of electrifying. If malfunction happens then the checking will be going on until the order of phase is right, and the error code will be displayed on the board. If there is no problem in the first checking, then it will be omitted.
- ✧ High pressure and low pressure protection :

When high pressure is equal or higher than 638 Psi, and lower pressure is equal or lower than 21Psi, the unit will stop.

Error & protection code

✧ **MRC-085HWN1-R(C), MRC-100HWN1-R(C), MRC-125HWN1-R(C), MRC-150HWN1-R(C), MRC-175HWN1-R(C), MRC-200HWN1-R(C), MRC-250HWN1-R(C), MRC-300HWN1-R(C) :**

Type	Content	Code	Remarks
Normal	Standby	------	
Normal	Constraint cool	ON	
Normal	Run	10.	
Error	Compressor phase sequence error or phase lack	E0	
Error	Condenser pipe temperature sensor (T3) in system A error	E1	
Error	Condenser pipe temperature sensor (T3) in system B error	E2	
Error	Over current protection of system A's compressor is active 3 times within 1 hour	E3	Unit shall be power-off to recovery
Error	Over current protection of system B's compressor is active 3 times within 1 hour	E4	Unit shall be power-off to recovery
Error	Evaporator pipe temperature sensor (T2) in system A error	E5	
Error	Evaporator pipe temperature sensor (T2) in system B error	E6	
Error	High & low pressure protection, or high discharge temperature protection of system A reached 3 times within 1 hour.	E7	
Error	High & low pressure protection, or high discharge temperature protection of system B reached 3 times within 1 hour.	E8	
Error	Indoor side room temperature sensor (T1) error	E9	

Continued :

Type	Content	Code	Remarks
Error	Ambient temperature sensor (T4) error	EA	
Error	Wired controller communication error	Eb	
Error	Eeprom error	EE	

Protection	Over-current protection of compressor in system A	P0	
Protection	Over-current protection of compressor in system B	P1	
Protection	Over-current protection of indoor side fan motor	P2	
Protection	Comprehensive protection of outdoor side fan motor	P3	
Protection	Protection of high/low pressure or high temperarture protection of discharge sensor in system A	P4	Comprehensive protection of system A
Protection	Protection of high/low pressure or high temperarture protection of discharge sensor in system B	P5	Comprehensive protection of system B
Protection	High temperature protection of condenser in system A	P8	Power off to recovery.
Protection	High temperature protection of condenser in system B	P9	Power off to recovery.
Protection	Anti-freezing protection of evaporator in system A	Pc	
Protection	Anti-freezing protection of evaporator in system B	Pd	
Protection	Protection of outdoor ambient temperature	PA	

Notes: If same protection which includes all system for 2-stage products is triggered 3 times within 1 hour, the unit should be power-off to recovery.

✧ **MRC-062HWN1-R(C), MRC-075HWN1-R(C):**

Content	**LED1**	**LED2**	**LED3**
	(Red)	**(Yellow)**	**(Green)**
Standby	OFF	OFF	ON
Normal operation	ON	ON	ON
Phase sequence error or phase lack	FLASH	FLASH	FLASH
Indoor side room temperature (T1) error, or high pressure protection, or high temperature protection of discharge sensor	FLASH	FLASH	OFF
Evaporator pipe temperature sensor (T2) error	FLASH	OFF	FLASH

Continued:

Content	**LED1**	**LED2**	**LED3**
	(Red)	**(Yellow)**	**(Green)**
Condenser pipe temperature sensor (T3) error	OFF	FLASH	FLASH

Ambient temperature sensor (T4) error	ON	FLASH	FLASH
Over-current protection of compressor	OFF	OFF	FLASH
Low temperature protection of evaporator	OFF	FLASH	OFF
Low temperature protection of evaporator	OFF	FLASH	OFF
High temperature protection of condenser	FLASH	OFF	OFF
Wired controller communication error	FLASH	FLASH	ON
Low pressure protection	FLASH	ON	FLASH
Defrost	ON	FLASH	FLASH

Phase sequence error or phase default:

Compressor sequence error or phase default:

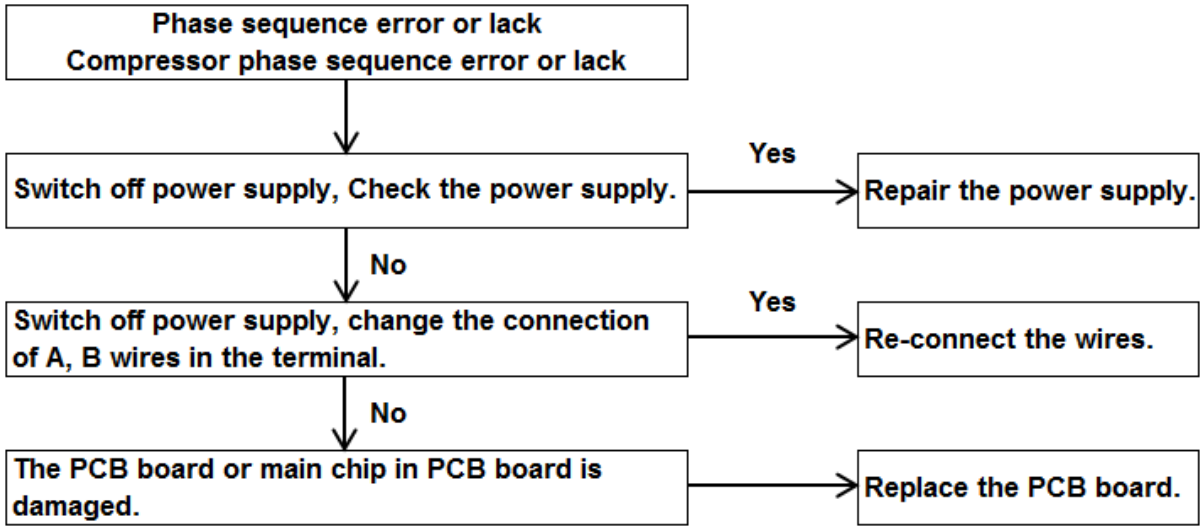

Evaporator pipe temperature sensor (T2) error:

Condenser pipe temperature sensor (T3) error :

Ambient temperature sensor (T4) error:

Indoor side room temperature sensor (T1) error :

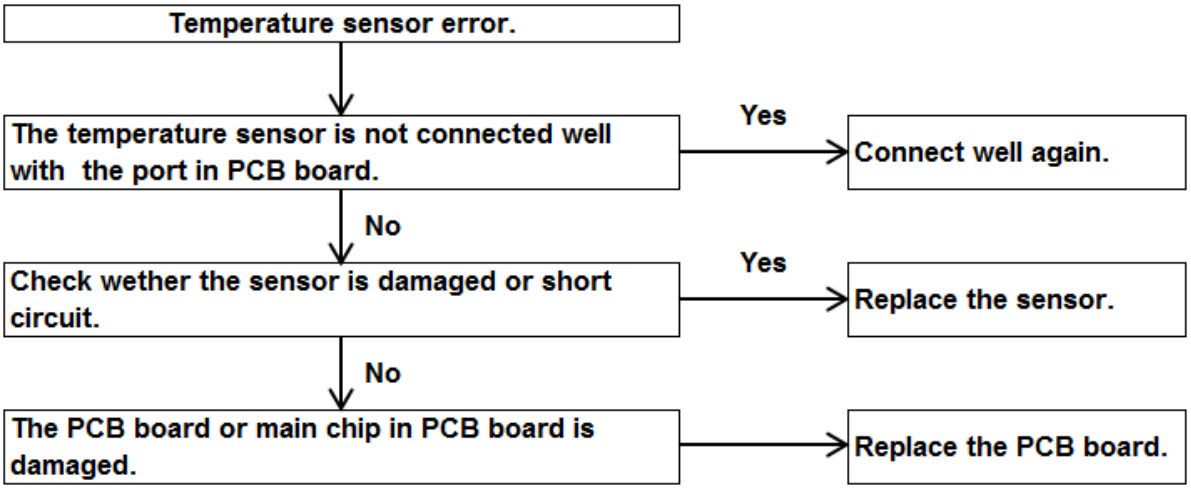

Over-current protection of compressor:

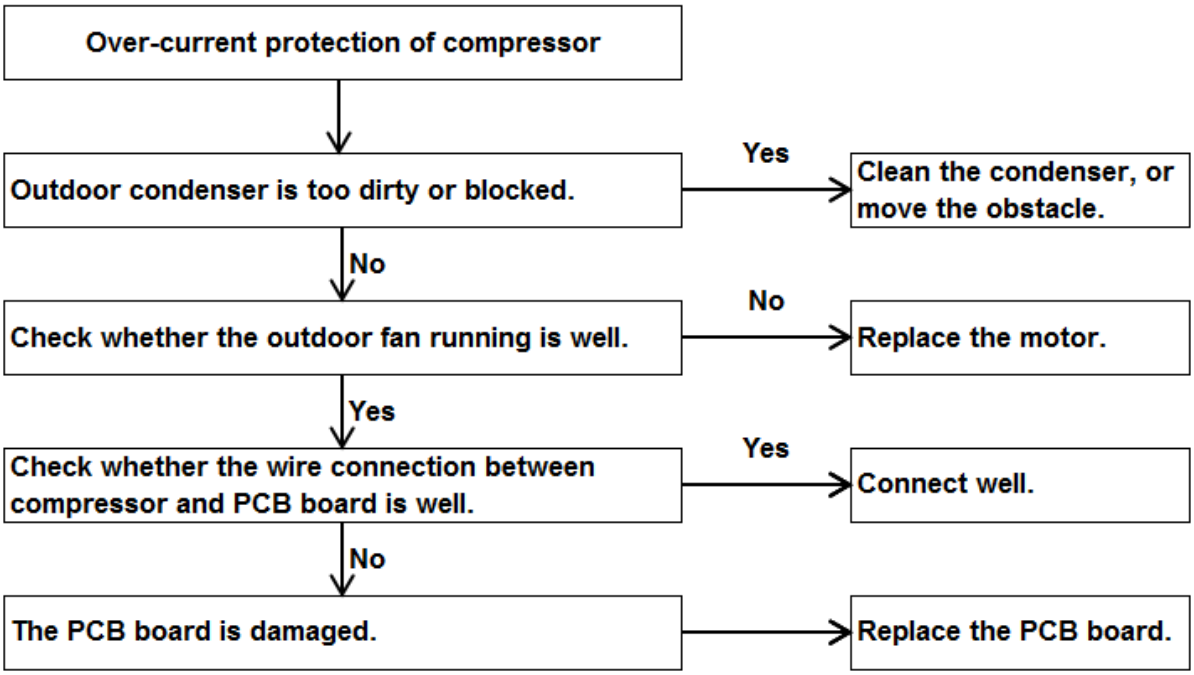

High pressure protection:

High discharge temperature protection :

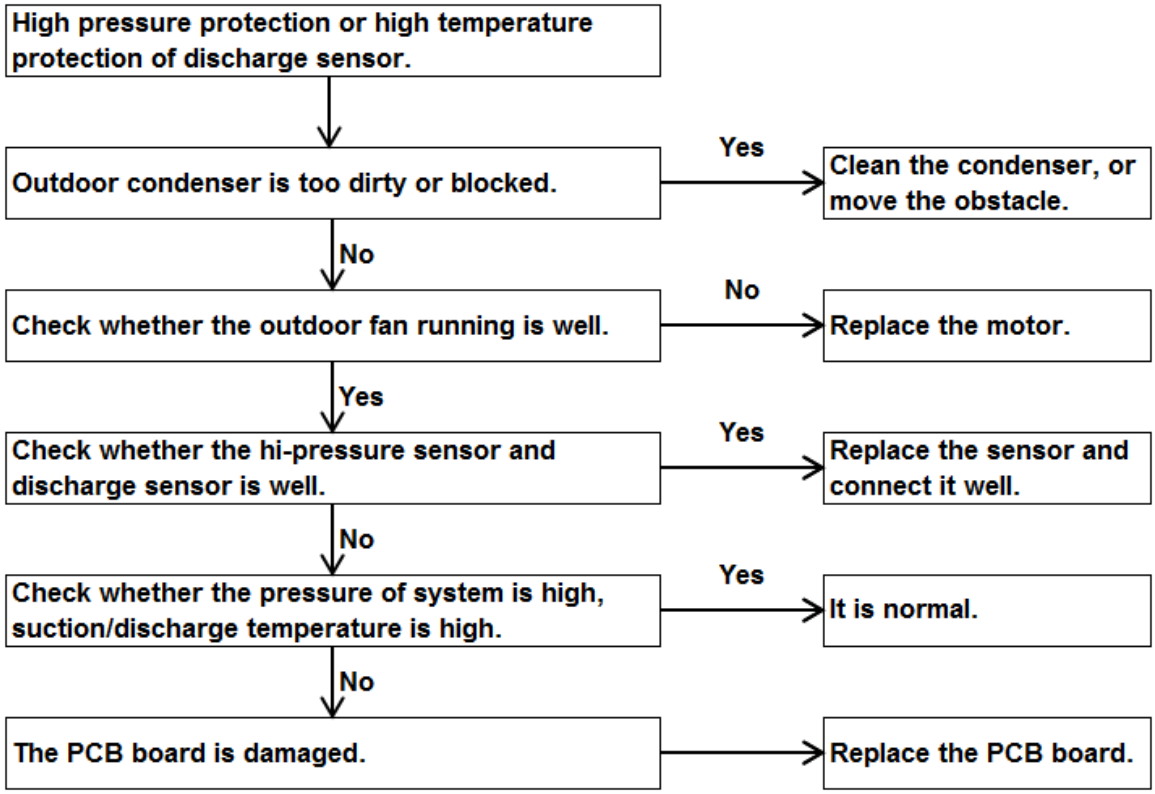

Wired controller communication error :

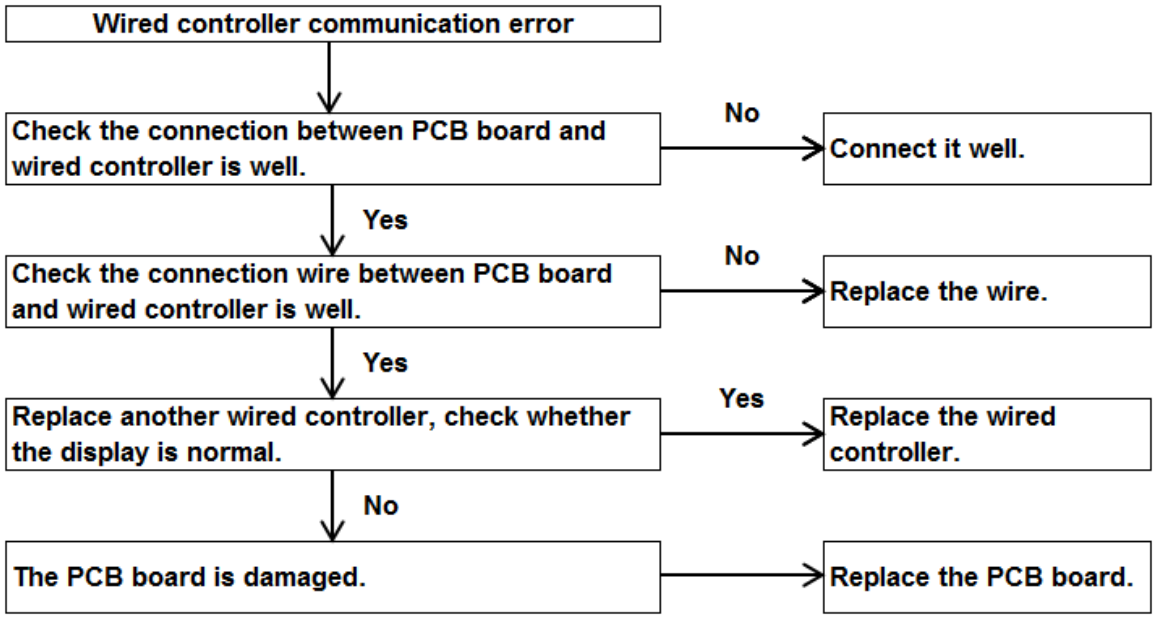

Low pressure protection :

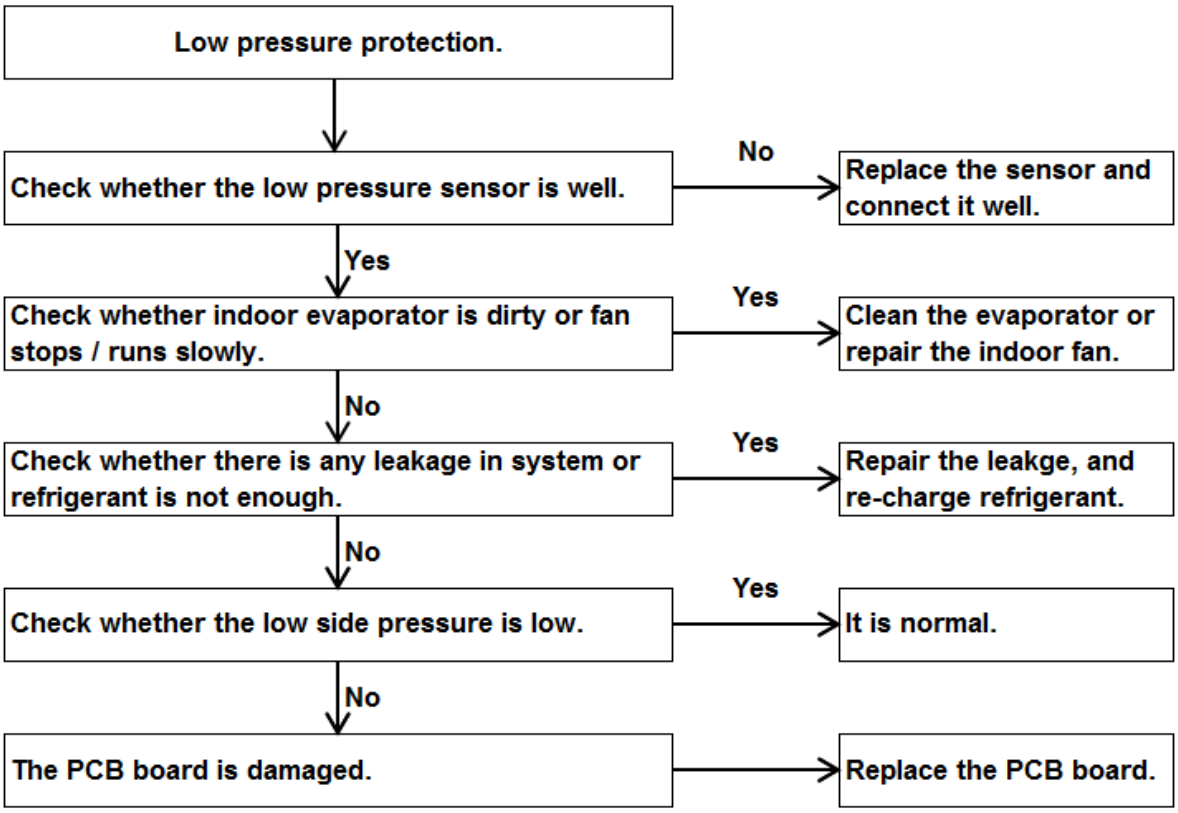

Eeprom error :

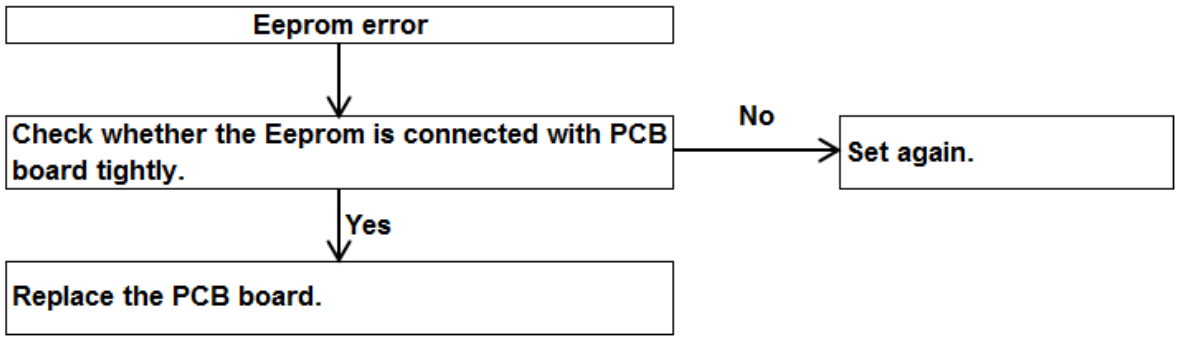

Over-current protection of indoor side fan motor :

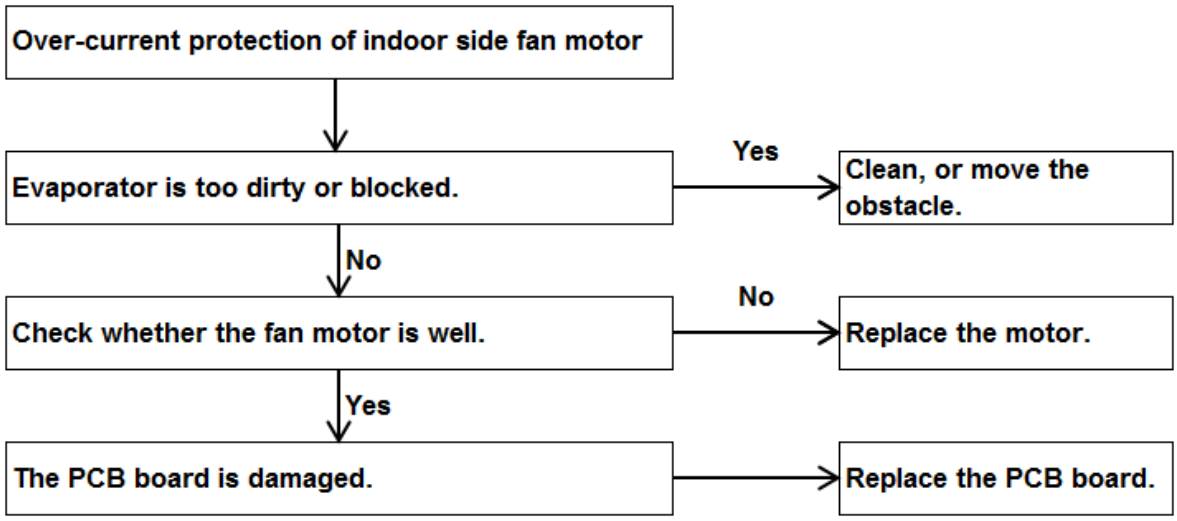

Comprehensive protection of outdoor side fan motor :

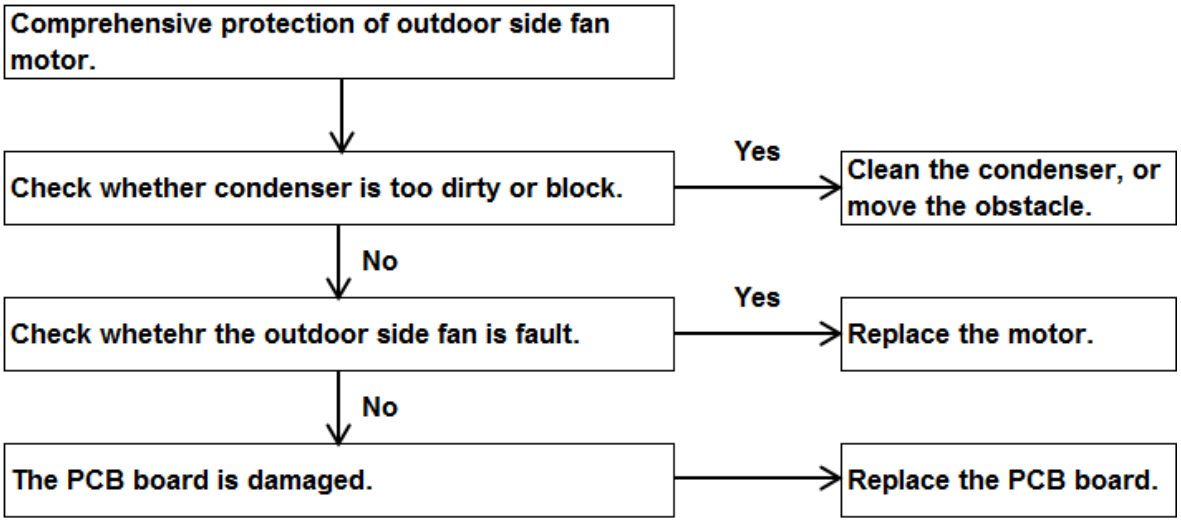

High temperature protection of condenser :

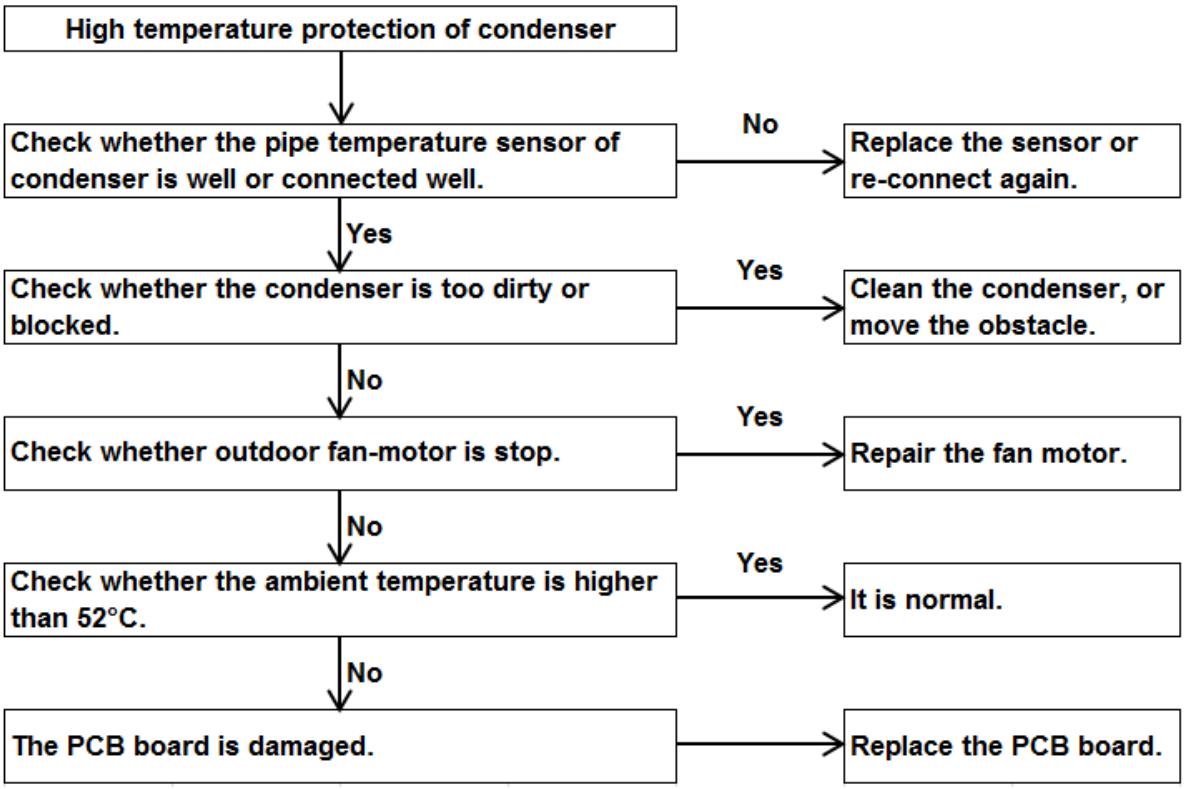

Low temperature protection of evaporator:

Anti-freezing protection of evaporator :

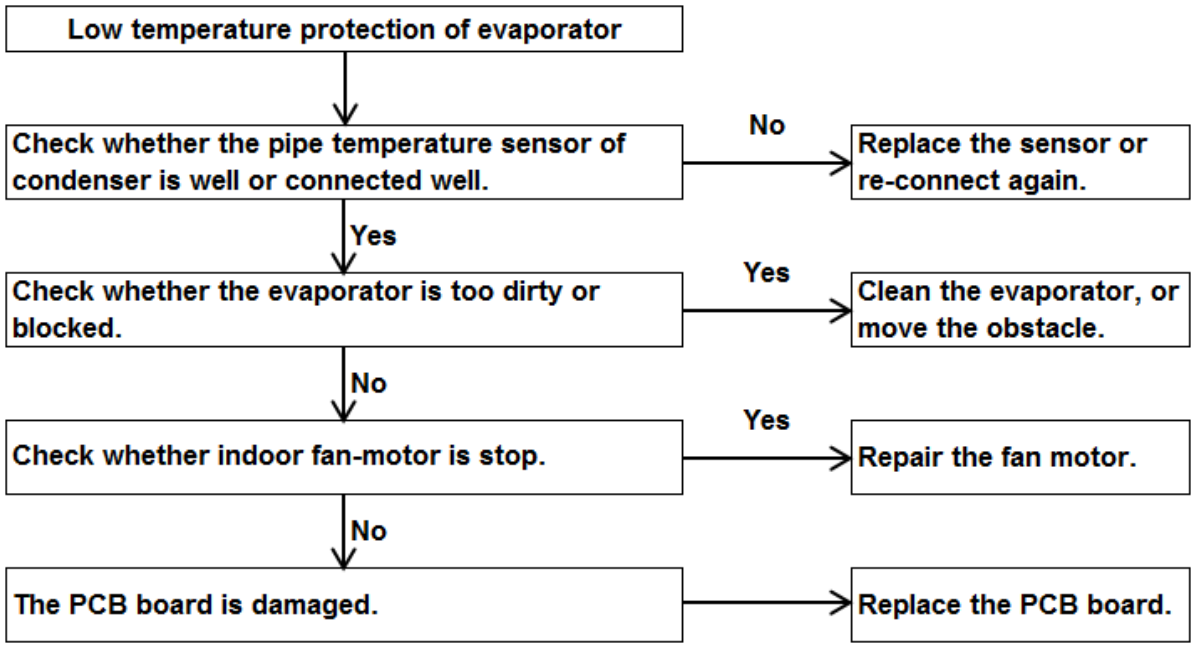

Protection of outdoor ambient temperature :

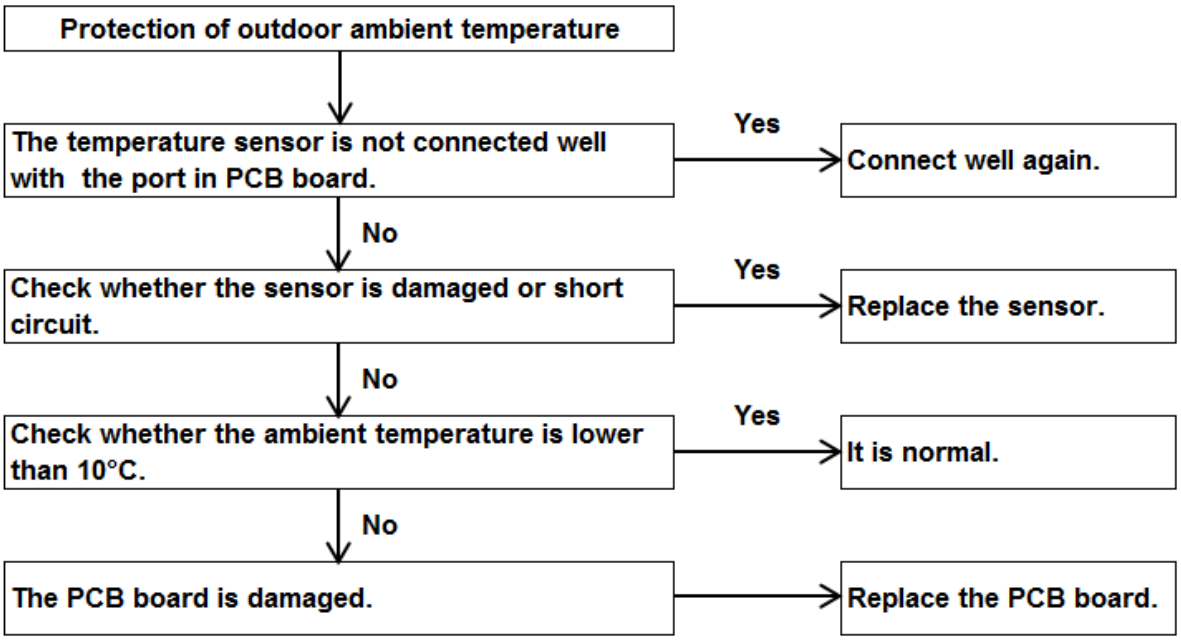

10. Maintenance

Caution

- ✧ Do not operate the unit without the evaporator fan access panel in place. Reinstall the access panel after performing any maintenance. Operating the unit without the access panel may result in severe personal injury.
- ✧ Disconnect the power supply before cleaning and maintenance.

Regular maintenance

Some regular maintenance has been carry on by user. It includes: change the one-time dust filter, clean casing, wash condenser and replace a new belt, as well as do some test for the equipment.

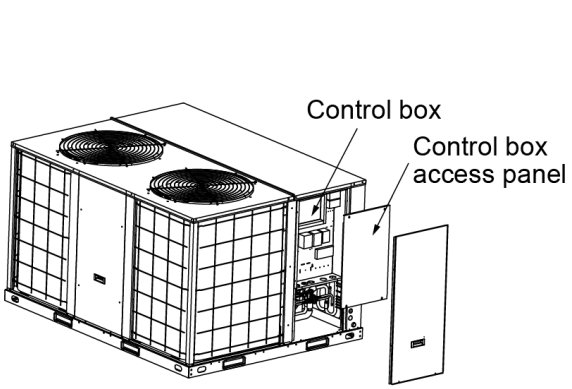

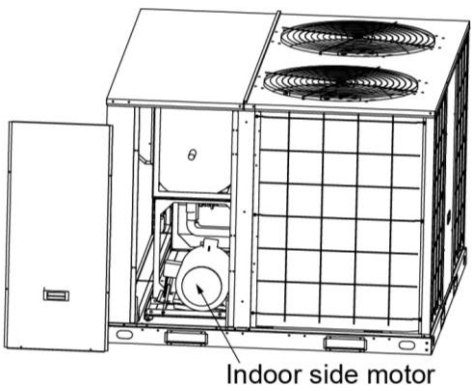

Regulating belt of tension

Refer to the following figure, loose 2 bolts, and move the electric motor to adjust belt tension. These two bolts are used for precision adjustment.

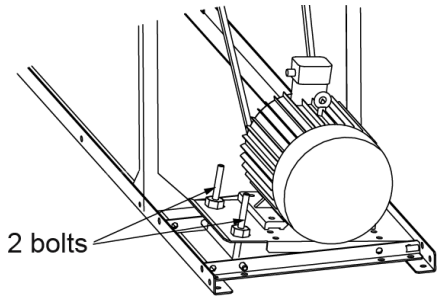

Belt tension is measured by belt tension indicator

✧ Calculate the deflection, deflection (L) = A/64.

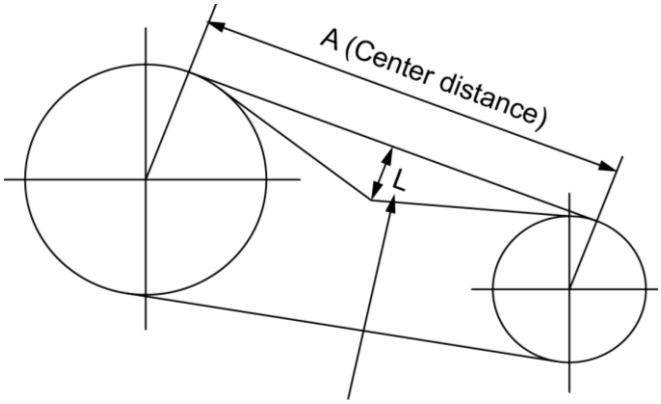

Belt tension indicator applied to middle center distance

Notes: L=A/64

Model	A (mm)
MRC-085HWN1-R(C)	380
MRC-100HWN1-R(C)	380
MRC-125HWN1-R(C)	560
MRC-150HWN1-R(C)	560
MRC-175HWN1-R(C)	580
MRC-200HWN1-R(C)	580
MRC-250HWN1-R(C)	480
MRC-300HWN1-R(C)	480

✧ Measure the belt deflection force, the force should be between the values shown in the

following lists.

✧ The belt which is too tight or too loose may generate noise and be harmful to the unit.

Belt section	For required to deflection		
	Small pulley diameter	Newton	Kilogram-force
SPA	80mm~132mm	25N~35N	2.5kg.f~3.6kg.f

Air intake filter clean (The filter should be customized).

Step 1: Dismantle the air filter.

✧ Twist of screws and get out the plate.

✧ Pull out the filter along the supporting slot.

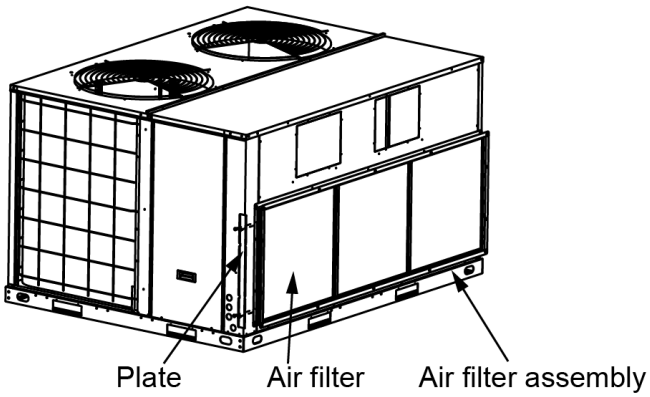

Step 2: Clean the air filter.

✧ Vacuum cleaner or fresh water may be used to clean the air filter. If the dust accumulated too much, please use soft brush and mild detergent to clean.

✧ The air-in side should face up when using vacuum cleaner.

✧ The air-in side should face down when using water.

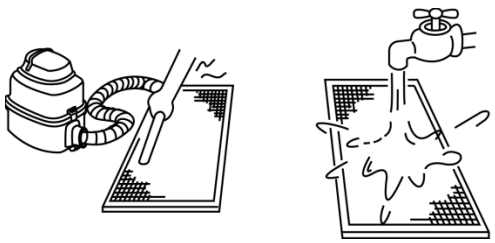

✧ After cleaning, please dry out in cool place. Do not dry out the air filter under direct sunshine or heat.

Step 3: Re-install the air filter.

Condenser coil

Unfiltered air circulates through the unit's condenser coil can cause the coil's surface to become clogged with dust. Clean the coil, vertically (i.e., with the fins), and stroke the coil surface with a soft brush. Be sure to keep all vegetation away from the condenser coil area.

Periodic maintenance

To keep the unit operating safety and efficiently, the entire system should be checked at least once each year. The examining the areas include:

- ✓ Filter;
- ✓ Motors and drive system components;
- ✓ Economizer gaskets (Reserved);
- ✓ Safety controls;
- ✓ Electrical components and wiring (For possible replacement and connection tightness);
- ✓ Condenser drainage (For cleaning);
- ✓ Unit duct connections (To check that they are physically sound and sealed to the unit casing);
- ✓ Unit mounting support (For structural integrity);
- ✓ The unit (For obvious unit deterioration).

Appendix: - Temperature sensor

Room / Pipe temperature sensor Resistance Valve (R25 = 10 kOhm±1%, B25/50 = 4100K±1%)

Temperature (°C)	$R_{Max.}$ (KΩ)	$R_{Nor.}$ (KΩ)	$R_{Min.}$ (KΩ)	Temperature Tolerance (°C)	
0	35.630	34.840	34.064	-0.41	0.42
1	33.741	33.011	32.292	-0.40	0.42
2	31.963	31.288	30.624	-0.39	0.41
3	30.290	29.666	29.051	-0.38	0.40
4	28.714	28.137	27.569	-0.38	0.39
5	27.230	26.697	26.172	-0.37	0.39
6	25.831	25.339	24.853	-0.36	0.38
7	24.513	24.058	23.609	-0.36	0.37
8	23.270	22.850	22.435	-0.35	0.36
9	22.097	21.710	21.327	-0.34	0.36
10	20.991	20.633	20.279	-0.33	0.35
11	19.947	19.617	19.290	-0.32	0.34
12	18.961	18.656	18.355	-0.32	0.33
13	18.030	17.749	17.471	-0.31	0.32
14	17.150	16.891	16.635	-0.30	0.32
15	16.318	16.080	15.844	-0.29	0.31
16	15.532	15.313	15.095	-0.29	0.30
17	14.788	14.587	14.386	-0.28	0.29
18	14.085	13.899	13.715	-0.27	0.28
19	13.419	13.249	13.079	-0.26	0.27
20	12.789	12.632	12.477	-0.25	0.27
21	12.191	12.048	11.906	-0.25	0.26
22	11.626	11.495	11.364	-0.24	0.25
23	11.090	10.970	10.850	-0.23	0.24

Continued:

Temperature	$R_{Max.}$	$R_{Nor.}$	$R_{Min.}$	Temperature Tolerance

(°C)	(KΩ)	(KΩ)	(KΩ)	(°C)	
24	10.582	10.472	10.363	-0.22	0.23
25	10.100	10.000	9.9000	-0.21	0.22
26	9.6518	9.5519	9.4520	-0.22	0.23
27	9.2262	9.1265	9.0270	-0.23	0.25
28	8.8218	8.7226	8.6235	-0.25	0.26
29	8.4376	8.3389	8.2405	-0.26	0.27
30	8.0723	7.9743	7.8767	-0.27	0.28
31	7.7250	7.6279	7.5312	-0.28	0.29
32	7.3947	7.2985	7.2028	-0.29	0.31
33	7.0805	6.9853	6.8906	-0.30	0.32
34	6.7814	6.6873	6.5939	-0.32	0.33
35	6.4968	6.4038	6.3116	-0.33	0.34
36	6.2257	6.1340	6.0431	-0.34	0.35
37	5.9676	5.8772	5.7875	-0.35	0.37
38	5.7216	5.6326	5.5443	-0.36	0.38
39	5.4873	5.3996	5.3127	-0.38	0.39
40	5.2639	5.1776	5.0922	-0.39	0.40
41	5.0509	4.9660	4.8821	-0.40	0.42
42	4.8478	4.7644	4.6819	-0.41	0.43
43	4.6541	4.5721	4.4911	-0.43	0.44
44	4.4692	4.3887	1.3092	-0.44	0.45
45	4.2928	4.2137	4.1357	-0.45	0.47
46	4.1244	4.0468	3.9702	-0.46	0.48
47	3.9636	3.8874	3.8123	-0.48	0.49
48	3.8100	3.7353	3.6617	-0.49	0.51

Continued:

Temperature (°C)	$R_{Max.}$ (KΩ)	$R_{Nor.}$ (KΩ)	$R_{Min.}$ (KΩ)	Temperature Tolerance (°C)	
49	3.6632	3.5900	3.5179	-0.50	0.52
50	3.5230	3.4512	3.3805	-0.52	0.53
51	3.3890	3.3186	3.2494	-0.53	0.55
52	3.2608	3.1919	3.1241	-0.54	0.56
53	3.1383	3.0708	3.0044	-0.56	0.57
54	3.0211	2.9550	2.8900	-0.57	0.59
55	2.9090	2.8442	2.7806	-0.58	0.60
56	2.8017	2.7382	2.6760	-0.60	0.61
57	2.6990	2.6369	2.5759	-0.61	0.63
58	2.6006	2.5398	2.4802	-0.63	0.64
59	2.5064	2.4469	2.3886	-0.64	0.66
60	2.4162	2.3580	2.3009	-0.65	0.67
61	2.3298	2.2728	2.2170	-0.67	0.68
62	2.2470	2.1912	2.1366	-0.68	0.70
63	2.1676	2.1130	2.0596	-0.70	0.71
64	2.0914	2.0381	1.9858	-0.71	0.73
65	2.0184	1.9662	1.9151	-0.73	0.74
66	1.9484	1.8973	1.8474	-0.74	0.76
67	1.8812	1.8312	1.7824	-0.76	0.77
68	1.8167	1.7678	1.7201	-0.77	0.78
69	1.7548	1.7070	1.6603	-0.79	0.80
70	1.6954	1.6486	1.6029	-0.80	0.81

Part. 4 Controller

1. Wired controller: KJR-12B 131

2. Wired Controller: KJR-25B 140

3. Centralized Controller: MD-CCM03(A) (Optional)..... 150

1. Wired controller: KJR-12B



KJR-12B/dP(T)-E

1.1 Wired controller specifications

Model	KJR-12B/dP(T)-E
Power supply	5.0V DC
Operation temperature	-15°C～43°C
Operation humidity	40%~90% RH

1.2 Introduction of indicators function

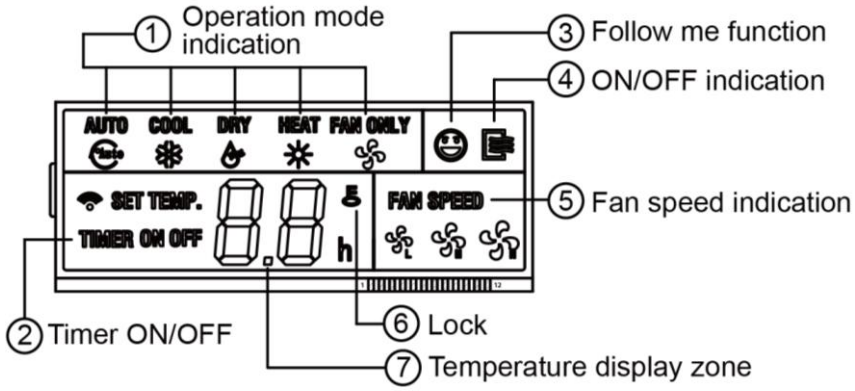

1. Operation mode indication:

When press '**MODE**' button, the following mode can be selected in circle.

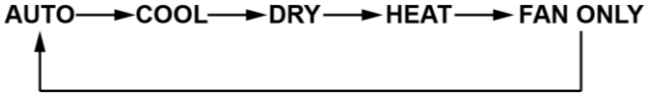

For cooling only model, the indicator '***HEAT'*** is skipped.

2. Timer ON/OFF

When adjust setting on time or only on time is set, the indicator '***ON***' is lighted.

When adjust setting off time or only off time is set, the indicator '***OFF***' is lighted.

If timer-on and timer-off timer both set, the indicators '***ON***' and '***OFF***' will be both lighted.

3. Follow me function

There is a temperature sensor inside the wired controller, after setting temperature; the detected temperature by this sensor will be compared with setting temperature. The space of wired controller will be same as the setting temperature.

It is available under cooling, heating and auto mode.

4. ON/OFF indication

When it is on, the icon will be displayed, otherwise it is extinguished.

5. Fan speed indication (For rooftop packages, it is not available.)

There are four fan modes: low, medium, high and auto. For some models, there is not medium fan speed, and the medium fan speed is seen as high speed.

6. LOCK

When the '**LOCK**' button is pressed, the icon will be displayed and other button is unable. Press the '**LOCK**' again, the icon will be extinguished.

7. Temperature display zone

Generally it displays setting temperature, it can be adjusted by press temperature button ▲and ▼. But in fan only mode, the temperature display zone will be blank.

1.3 Introduction of buttons

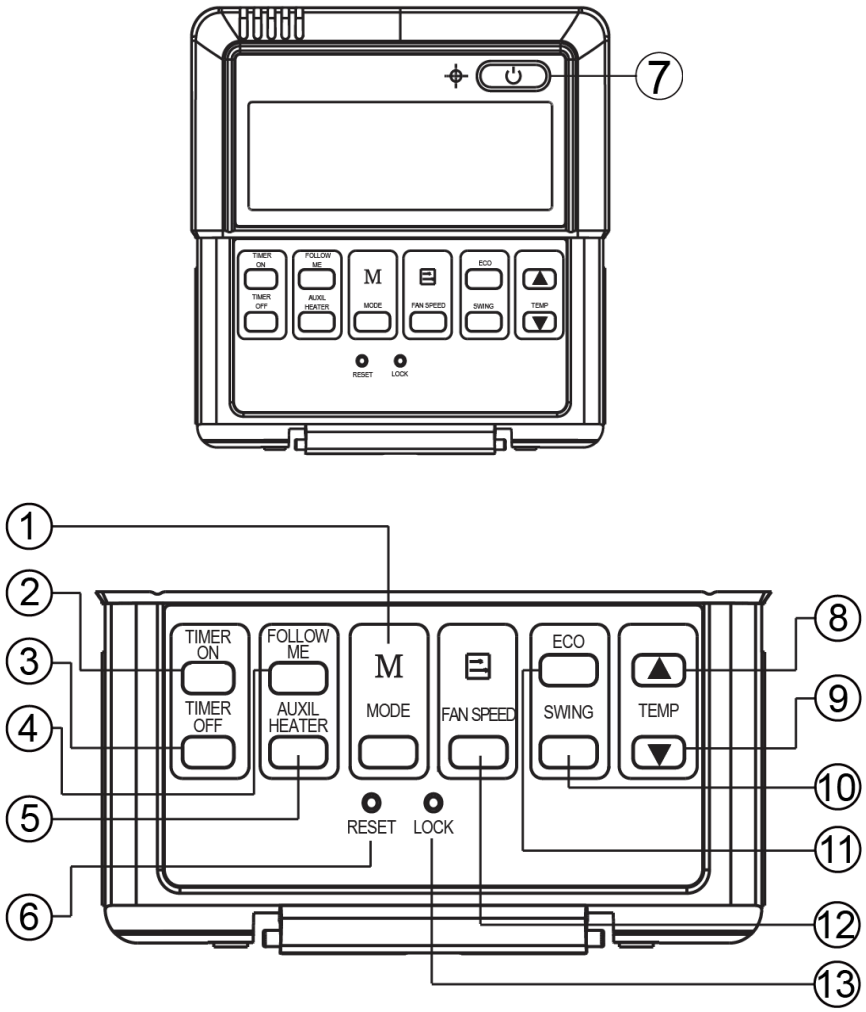

1. **Mode** button:

   When press this button, the operation mode changes as the following sequence:

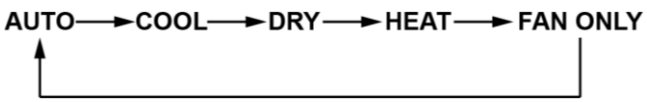

   But for the cooling only model, the heating mode is skipped.

2. **TIMER ON** button:

   Press this button, timer-on function is active. Then every press, the time will increase 0.5h, after 10 hours, increase by 1 hour for each press. If cancel this function, just set it to 0.0.

3. **Timer off** button:

   Press this button, timer-off function is active. Then Then every press, the time will increase

0.5h, after 10 hours, increase by 1 hour for each press. If cancel this function, just set it to 0.0

4. **FOLLOW ME** button:

When under cool, heat and auto mode, and press this button, follow me function is active. Press again, this function is ineffective.

5. **AUXIL HEATER** button: (Only available for Cooling only with EHK model.)

If press this button in heat mode, electrical heater function become ineffective.

6. **RESET** button: (Hidden)

Use a 1 mm stick to press in the little hole, then the current setting is canceled. The wired controller enters into original state.

7. **ON/OFF** button

When in off state, press this button, the indicator is on, the wired controller enters into on state, and send setting information to main PCB board. When in on state, press this button, the indicator is off, and send instruction. If timer-on or timer-off has been set, it cancels this setting then sends instruction to stop the machine.

8. **TEMP ▲** adjust button:

Set indoor temperature up. If press and hold on, it will increase at 1°C (2°F) per 0.5 second.

9. **TEMP ▼** adjust button:

Set indoor temperature up. If press and hold on, it will decrease at 1°C (2°F) per 0.5 second.

10. **SWING** button: (Reserved)

First press, then start swing function; after second press, stop swing.

11. **ECO** button: (Economy operation, Reserved)

Press this button, and then the unit will operate in economy mode. Press again, this mode can be exited.

12. **FAN SPEED** button: (For rooftop packages, it is not available.)

When press this button consecutively, and then the indoor side fan speed will circles as following:

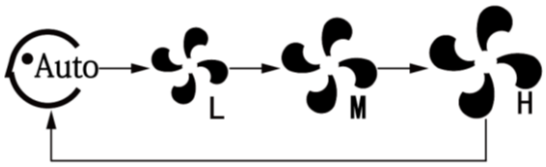

13. **LOCK** button: (Hidden)

When push the **LOCK** button, all current settings are locked in and the wired controller does not accept any instruction except that of the **LOCK** button. Use the lock mode when want to prevent setting from being changed accidentally or play fully. Push the **LOCK** button again when want to cancel the lock mode.

1.4 Operation

Automatic operation

Connect to the power supply, and the operation lamp in main PCB board will flash.

Step 1: Press **MODE** button, and select ***AUTO*** icon.

Step 2: Press the button ▲ and ▼, set temperature as requirement; generally it is among from 17°C to 30°C.

Step 3: Press **ON/OFF** button, operation lamp is on, the unit can be worked in auto mode, and indoor side fan speed is auto, and cannot be changed. Auto is displayed on LCD. Press it again to stop.

Notes: Economy operation is valid in auto mode.

Cool / Heat / Fan only mode operation

Step 1: Press **MODE** button, and select ***COOL***, or ***HEAT***, or ***FAN ONLY*** icon.

Step 2: Press temperature adjust button to select setting temperature.

Step 3: Press **FAN SPEED** button to select high, medium, low or auto. (For rooftop packages, it is not available.)

Step 4: Press **ON/OFF** button, indoor unit operation lamp on, it works in selected mode. Press **ON/OFF** button again, it stops to work.

Notes: In fan only mode, temperature cannot be set.

Dry operation

Step 1: Press **MODE** button, select ***DRY*** icon.

Step 2: Press temperature adjust button to select setting temperature.

Step 3: Press **ON/OFF** button, indoor unit operation lamp on, it works in dry mode. Press **ON/OFF** button again, it stops to work.

Notes: Under dry mode, economy operation and fan speed adjustment are ineffective.

Timer setting

The timer time is relative time, and that is delay after setting time. So when timer is set, the standard time cannot be adjusted.

Timer setting – Timer on only

Step 1: Press **TIME ON** button, it display ***SET*** on LCD screen, and display ***H*** and ***ON***, it is waiting for timer on setting.

Step 2: Press **TIMER ON** button repeatedly to adjust time setting.

Step 3: If press this button and hold on, the time will increase at 0.5h, after 10 hours, it increase at 1 hour.

Step 4: After setting 0.5 second, the wired controller sends timer-on information to the unit, it is finished.

Timer setting – Timer off only

Step 1: Press **TIME OFF** button, it display ***SET*** on LCD screen, and display ***H*** and ***OFF***, it is waiting for timer on setting.

Step 2: Press **TIMER OFF** button repeatedly to adjust time setting.

Step 3: If press this button and hold on, the time will increase at 0.5h, after 10 hours, it increase at 1 hour.

Step 4: After setting 0.5 second, the wired controller sends timer-on information to the unit, it is finished.

Timer-on and timer-off both

Step 1: Set timer-on time as the corresponding step 1 and step 2.

Step 2: Set timer-off time as the corresponding step 1 and step 2.

Notes: Timer-off time must be longer than timer-on time.

Step 3: 0.5 second after setting, the wired controller send information to the unit. And the setting is finished.

Change timer

When need to change timer time, press corresponding button to revise it. If cancel timer, please change timer time to 0.0.

1.5 Installation of wired controller

Caution

- ✧ Do not install it in a place where combustible gas easily leaks. Once combustible gas leaks and remains around wired controller, fire may be cause. Do not install it in a place with oil, steam or sulphur gas, or else deform or malfunction may occur.
- ✧ Wires must be suitable for the current of the wired controller. Otherwise, electricity leakage or heating may be caused, which may result in fire.
- ✧ Install the wire joint (5P) to the appointed position of the electric controlling box.
- ✧ Circuit of wired controller is low voltage circuit, and never connected with a standard 220V or 380V circuit. Also do not put it into a same wiring tube, and the interval must be more than 300~ 500mm.
- ✧ The shield cable must be connected stable to the ground, otherwise transmission may fail.
- ✧ Wire must be suitable for wired controller, never bring outside force to bear on the terminal.
- ✧ Do not to attempt to extend the shield cable by cutting. If it is necessary, please use terminal connection block to connect.

Accessories

Item	Quantity	Remarks
Wired controller	1	\
Wood mounting screw	3	M4×20 (For mounting on the wall)
Mounting screw	3	M4×25 (For mounting on the electrical switch box)
Installation manual	1	\
Owner's manual	1	\
5P terminal group	\	\
Installation screw	\	For fixing terminal.

Preparing at site

Item	Quantity	Remarks
5-core shield cable	1	RVVP-05mm^2×5. The longest wire is 30m.
Switch box	1	\
Wiring tube	1	Insulating sleeve and tightening screw.

Wiring principle

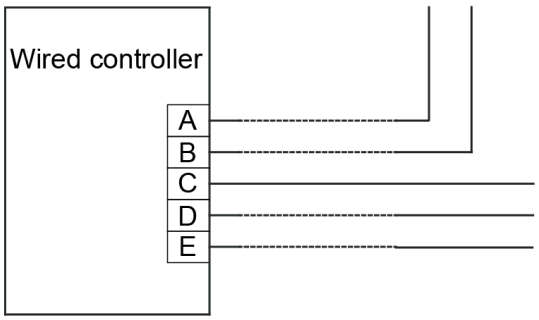

When it is necessary to use the wired controller, please follow the label of A/B/C/D/E to connect the wired controller. And the other side of the signal wire should be connected with main PCB board well. A is anode, and B is cathode. C is +5V. D is GND and E is RUN.

Installation:

Confirm the installed location of wired controller, before install the wired controller. If install it on the wall without electric switch box, the hole for 5P-terminal of wired controller is necessary.

Dimension of rear cover as following picture (Unit: mm):

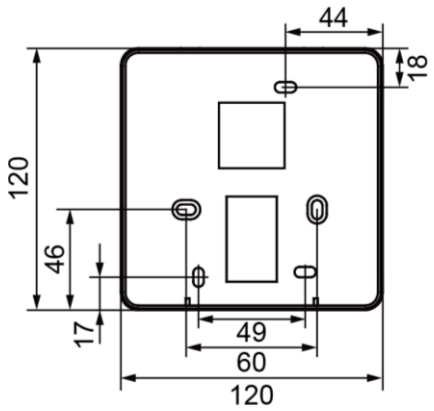

Installation figure as following:

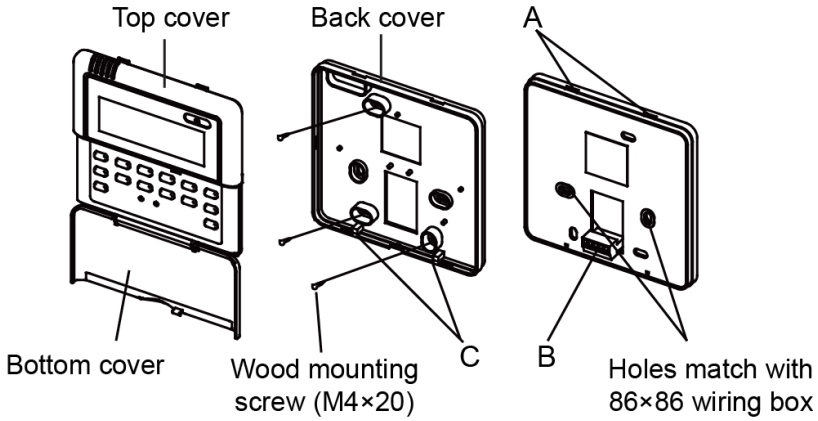

A: Turn a screwdriver at the concave on bottom panel of the wired controller to remove the back cover.

B: When installing the wired controller cover, it is sure that there is a hole in the wall to avoid the wired controller back cover being fixed directly to the wall which is not allowed for the wire joint extrudes out of the back cover.

C: When installing the wired controller, adjust the bottom of the controller board to the back cover which should be fixed first, then press the other end of the controller board.

Notes: The connecting wire should be a little longer as to take away the switch board and controller easily for maintenance.

2. Wired Controller: KJR-25B



KJR-25B

2.1 Wired controller specifications

Model	KJR-25B
Power Supply Voltage	AC 24V
Temperature display range	0°C～37°C
Temperature control range	7°C～35°C
Temperature control accuracy	±0.5°C
Sensor	NTC 1%, B=3950

2.2 Introduction of button

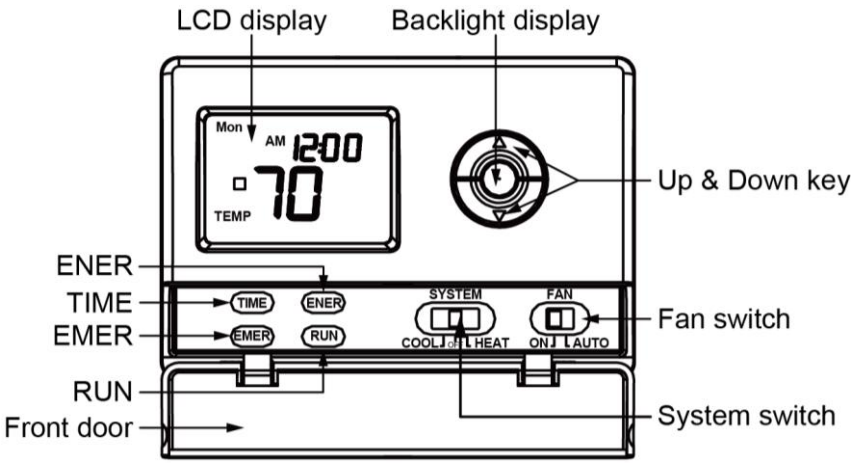

TIME:

Be used to entering time.

ENER:

Measures and displays heating and cooling system operating time for today, yesterday, this week, last week or total. By monitoring energy usage, the thermostat can be programed to

optimize energy savings.

EMER:

It is used to select operating under EMER mode.

RUN:

Returns display to current time and temperature.

Backlight display:

This key allows users to operate the device in a dark room. The device lights up when a button is pressed, and turns off when a given operation is completed. The display will remain illuminated for 8 seconds after the last key is pressed. If the controller is in low battery warning condition, this function will not operate. Replace with 2 AA alkaline batteries to restore the function.

Up & Down key:

It is used to change the temperature setting. Also used for increasing and decreasing selections in the time, program and span functions.

Fan switch:

It is used to select automatic or continuous fan operation. It should normally be located in the **AUTO** position. The fan will be turned on along with normal operation of the unit. To run the fan on continuously, slide the FAN switch to the **ON** position.

System switch:

It can determine the operating mode of the wired controller. Select **COOL**, **OFF** and **HEAT**. Anytime you install or remove the controller from the wall plate, slide the system selector to the **OFF** position to prevent the possibility of a rapid system ON-OFF.

Front door:

Cover keys open with one finger from left or right.

2.3 Configuration

After installation and wiring connection of wired controller, it should be operated configuration first.

Set **SYSTEM** switch to **OFF**, and then press both **UP** and **DOWN** keys for 5 seconds to enter configuration menu. The display will show the first item in the configuration menu.

Press button	Displayed (Factory default)	Press up or down button to select	Comments
Backlight button	MS 2	SS1	Single stage
		MS1	Multi-stage
		HP1	Heat Pump (Single stage)
		HP2	Heat Pump (2-stage)
Backlight button	(RECO)off	On	Recovery enable
		Off	Recovery disabled
Backlight button	(SPAN)2	1	Span(one stage)1
		2	Span(one stage)2
		3	Span(one stage)3
Backlight button	(BLIT)on	On	Backlight on
		Off	Backlight off
Backlight button	(SP2)2	1	Span(Two Stage) 1
		2	Span(Two Stage) 2
		3	Span(Two Stage)3
Backlight button	(TEMP)F	F	Selects temperature display °F
		C	Selects temperature display °C
Backlight button	HOUR(12)	12	Selects time format display 12hours
		24	Selects time format display 24hours
Backlight button	COMP(OFF)	OFF	Selects Compressor Lockout OFF
		ON	Selects Compressor Lockout ON
Backlight button	COOL(2)	2	This model must select 2
		1	Just use for one stage system
Backlight button	FACT(0)	0	Display normal
		1	Use for another model to go back to factory default
		2	All the setting will go back to factory default

The configuration menu allows you to set certain thermostat operating characteristics to your system or personal requirements.

The configuration menu table summarizes the configuration options. An explanation of each option follows. Press **Backlight** button to change to the next menu item.

Press **RUN** button to exit the menu and unit will return to the normal operation. If no keys are pressed within 15 seconds, the thermostat will revert to normal operation.

1) Single Stage, Multi-stage or Heat Pump System Configuration

This control can be configured for Heat Pump or two stage heat/one stage cool multi-stage operation. The display indicates ***MS2*** (default for multi-stage mode) in the display. The Multi-stage configuration can be toggled to ***SS1*** or ***HP1*** by pressing the up or down key. In Multi-stage configuration, EMER mode is useless.

2) Fast or Slow Cycle Selection (one stage)

3) Select Backlight function OFF or ON

4) Fast or Slow Cycle Selection (two stages)

5) Select °F or °C Readout. Changes the display readout to Centigrade or Fahrenheit as required

6) Selects time format display 12hours or 24hours

7) Select Compressor Lockout COMP OFF or ON.

Selecting ***COMP ON*** will cause the thermostat to wait 4 minutes before turning on the compressor if the heating and cooling system loses power. It will also wait 5 minutes minimum between cooling and heating cycles. This is intended to help protect the compressor from short cycling. Some newer compressors already have a time delay built in and do not require this feature. Your compressor manufacturer can tell you if the lockout feature is already present in their system. When the thermostat compressor time delay occurs it will flash the set point for about four minutes.

8) This model must select 1.

9) This model must select 1 to back factory Default.

2.4 Operation instructions

1) Fan operation:

Step 1: Turn on power supply to system.

Step 2: Move **FAN** switch to **ON** position. The fan of unit will begin to operate.

Step 3: Move **FAN** switch to **AUTO** position. The fan of unit will operate according to the setting of system immediately.

2) Cooling operation:

Step 1: Move **SYSTEM** switch to **COOL** position to select cool mode.

Step 2: Press to adjust the wired controller setting below room temperature. The fan of indoor side should come on immediately on high speed, followed by cold air circulation. The display should show ***STG1***.

Step 3: Adjust temperature setting to 2°C below room temperature. The second stage cooling should begin to operate and display should show ***STG1+2***.

Step 4: Press to adjust the temperature setting above room temperature. The cooling system should stop operating.

3) Heating operation (Only for heat pump unit):

Step 1: Move **SYSTEM** switch to heat mode. If the auxiliary heating system has a standing pilot, be sure to light it.

Step 2: Press to adjust the wired controller setting to 1°C above room temperature. The heating system should begin to operate. The display should show ***STG1***. However, if the set point temperature display is flashing, the compressor lockout feature is operating.

Step 3: Adjust temperature setting to 3°C above room temperature. If the system configuration is set at ***MS2***, ***HP2*** or ***HP1***, the auxiliary heat system should begin to operate and the display should show ***STG1+2***.

Step 4: Press to adjust the wired controller below room temperature. The heating system should stop operating.

4) Emergency operation (Only for heat pump unit)

EMER by passed the heat pump to use the heat source wired to terminal E on the wired controller. EMER is typically used when compressor operations is not desired, or prefer back-up heat only.

Step 1: Press **SYSTEM** switch to select heat mode, then press **EMER** key. ***EMER*** will show on the display.

Step 2: Press to adjust wired controller setting above room temperature. The Aux. heating system will begin to operate. The display will show ***STG1***, ***EMMER*** to indicate that the Aux. heating system is operating.

Step 3: Adjust temperature setting to 2°C above room temperature. The auxiliary heat system should begin to operate and the display should show ***STG1+2***.

Step 4: Press to adjust the wired controller below room temperature. The Aux. heating system should stop operating.

5) Day and time setting

The LCD will show this following figure information when batteries are first installed. The temperature will update after a few seconds. During time and day setting mode, the temperature displays will go blank.

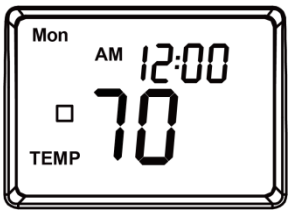

Examples: Set the wired controller to the current time of 2:16 PM on Saturday.

Step 1: Press **TIME** to enter time and day setting mode. The current hour and ***AM*** / ***PM*** indicator will be flashing.

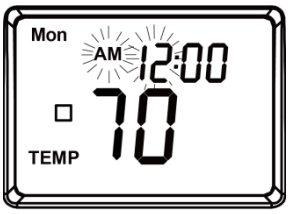

Press **UP** or **DOWN** to change the hour up or down to the current hour.

Notes: The ***AM*** / ***PM*** indicator, as the display will change at 12 AM and 12PM.

Step 2: Press **TIME** again to change from hour setting to minute setting. The current minute will be flashing.

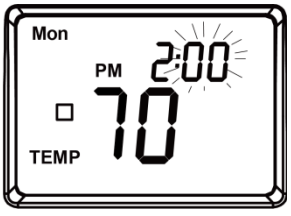

Press **UP** or **DOWN** to change the minute up or down to the current minute.

Step 3: Press **TIME** again to change from minute setting to day setting. The current days will be flashing. Press **UP** or **DOWN** to change the day up or down to the current day.

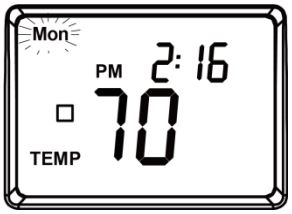

Step 4: Press **TIME** again to change back to the normal display.

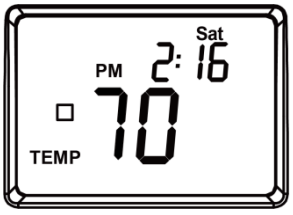

6) Reviewing the current temperature setting

Press **UP** and **DOWN** keys for less than 1 second. The setting temperature is shown above current room temperature.

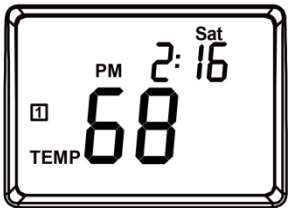

7) Energy monitor

The energy monitor feature measures and stores the amount of time the heating and air conditioning system operates. Press **ENER** key, and the usage can be display for today (Since 12 AM), yesterday, this week (Since Monday), last week (Last Monday through Sunday), and total (Up to 999 hours). By monitoring energy usage, it is easy to know how much the set-back periods are saving. To review energy usage, press **ENER** to cycle through today, yesterday, this week, last week and total. Press it again to return to normal mode, or wait 15 seconds for display to return to normal mode. Also, return to normal mode at any time by pressing **RUN**.

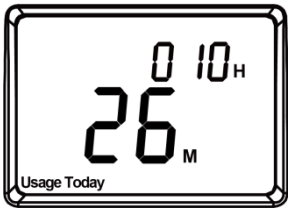

Example: this LCD display shows today's usage to be 10 hours, 26 minutes. Press **RUN** and hold for 3 seconds to reset the energy monitor's counters. The display will blink and counter will be cleared to zero.

Clearing the energy monitor counter will also clear the filter monitor counter, as filter usage and total energy usage are the same. Also, clearing the filter monitor counter will clear all energy monitor counters as well.

8) Filter monitor

This controller also keeps a record of the number of hours filter has been in use. To maximize unit's performance and energy efficiency, changing or clearing filter regularly is necessary.

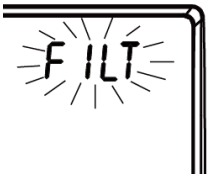

When the total system run-time for heat and cool reaches 500 hours, the filter is needed to clean or change, and the FILT will continue to flash until the counter is set back to zero.

Press **ENER** to review total filter usage. The display will blink FILT. Then show the filter monitor counter. After 15 seconds, the display will return to normal mode, or press **RUN** to exit immediately.

The filter monitor will display up to 999 hours and 59 minutes of usage. In this example ,the counter is at 410 hours and 26 minutes.

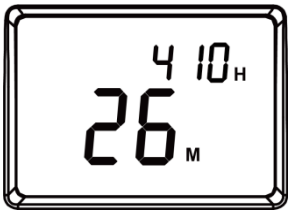

9) Keyboard lock

The keyboard can be locked to prevent unauthorized changes to the controller. To lock or unlock the keyboard, press and hold **RUN** key for 3 seconds. The keyboard is locked. When ***LOCK*** appears on the display, all keys are locked, and any time a key is pressed, ***LOCK*** will appear on the display for 1 second.

10) Low battery warning

The controller has a two-stage lower battery warning system. When the batteries are first detected to be weak, the first stage low battery warning is indicated by ***BATT*** flashing on the LCD display. At earliest convenience, the batteries with 2 new AA alkaline batteries should be replaced.

When the batteries become too weak for normal operation, the controller enters the second stage low battery warning which shuts down the controller. In this condition, ***BATT*** flashes alone on the display screen and the thermostat will turn unit off. The unit will remain shut-off until the batteries are replaced.

The controller will still keep the current set temperature and filter run-time in memory until new batteries are installed. After confirming that new batteries have been inserted, the controller will return to normal operation.

2.5 Installation of wired controller

Caution:

- ✧ This controller cannot connect with 110/220 and 380V power.
- ✧ To prevent electrical shock and / or unit damage, disconnect electric power to unit at main fuse or circuit breaker box until installation is complete.

Electric / gas switch:

This controller is configured from the factory to operate a heat/ cool, fossil fuel (gas, oil, etc.), forced-air system. It is configured correctly for any system that DOES NOT requires the controller to energize the fan on a call for heat.

If the system is an electric heat or heat-pump system that requires the controller to turn on the fan on a call for heat, locate the **ELEC**/**GAS** switch on the back of the controller and switch it to the **ELEC** position.

This will allow the controller to energize the fan immediately on a call for heat. If it is unsure if the heating/ cooling system requires the thermostat to control the fan, contact a qualified heating and air conditioning service person. When the controller is configured for heat pump, the controller will always power the circulator fan on a call for heat in the heat mode. The **ELEC**/**GAS** switch must be set to match the type of auxiliary heat system uses for proper operation in the emergency mode.

All wiring diagrams are for typical systems only.

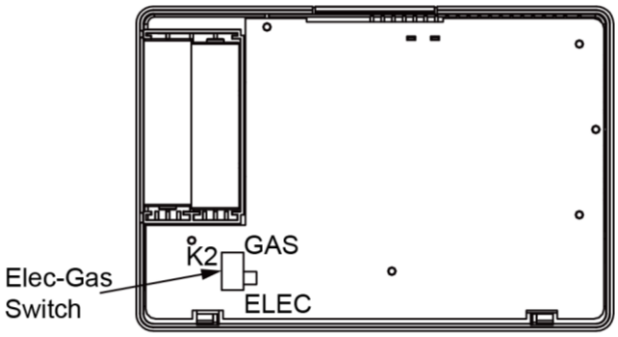

Installation:

Step 1: Remove the packing material from the controller. Gently pull the cover straight off the base. Forcing or prying on the controller will cause damage to the unit.

Step 2: Connect wires beneath terminal screws on base using appropriate wiring schematic.

Notes: The default setting value of the reminding function is 2,500 hours, and it can change to be 5,000 hours or 10,000 hours. The setting methods refer to the part of wired controller initial parameter setting.

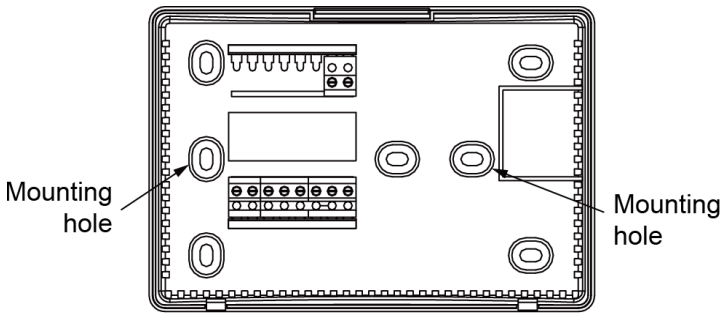

Step 3: Place base over hole in wall and mark the locations of mounting hole on wall using base as a template.

Step 4: Move base out of the way. Drill mounting holes.

Step 5: Fasten base loosely to wall, using two mounting screws. Place a level against bottom of base, adjust until level, and then tighten screws. Leveling is for appearance only and will not affect the controller operation. If using existing mounting holes, or if holes drilled are too large and do not allow to tighten base snugly, use plastic screw anchors to secure sub-base.

Step 6: Push excess wire into wall and plug hole with a fire-resistant material (such as fiberglass insulation) to prevent drafts from affecting controller operation.

3. Centralized Controller: MD-CCM03(A) (Optional)



Notes: For some model, the products with factory default cannot be connected with centralized controller.

3.1 Centralized controller specifications

Model	MD-CCM03(A)
Power Supply Voltage	220~240V 50Hz 1Ph
Ambient Temperature Range	-15°C～43°C
Ambient Humidity Range	RH40%~RH90%

Performance Features

1. System composition, centralized control.
2. Keywords and general function description.
3. Technical indices and requirements.
4. Indoor unit working status display.
5. Locking remote controller, locking keyboard of centralized controller and locking running mode.

3.2 Keypad of centralized controller

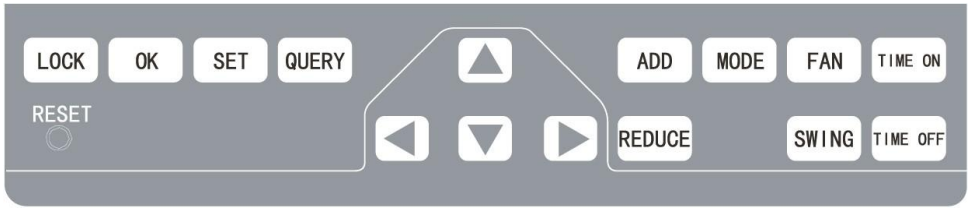

1) LOCK: In the mode setting mode, press the lock key, and the remote controller of the currently selected air conditioner will be locked or unlocked. The operation mode is: If the single-machine setting is selected, the operation is performed for the air conditioner of the current address only. If the remote controller of the air conditioner is locked currently, issue the lock command; otherwise, send the lock command. If the single-machine mode is not selected, and the remote controller of one or more currently selected air conditioners is locked, issue the unlock command; if the remote controllers of all currently selected air conditioners are in the non-locked status, issue the remote controller lock command.

When the remote controller of the air conditioner is locked, the air conditioner does not receive remote control signals from the remote controller or wired controller until the remote controller is unlocked. Press THE **QUERY** key and then press the **LOCK** key, and the keys of the centralized controller will be locked or unlocked. If the keys are currently locked, press the **LOCK** and ▲ keys concurrently again, and the keys will be unlocked; if the keys are currently unlocked, press the **LOCK** and ▲ keys concurrently, and the keys will be locked. If the keys are locked, pressing any key will be ineffective, except unlock operation. In the unified setting page, press the ▲ key and the **LOCK** key concurrently to lock all air conditioner modules in the network. The mode locking is cancelled when the key is pressed again.

Note: When locking or cancelling lock, the corresponding icon indication appears or disappears only after all the attached air conditioners are set completely, so it takes a time period. When there are many attached air conditioners, please wait patiently.

2) OK: In the setting page, press it to send the currently selected mode status and the auxiliary function status to the selected air conditioner, and display the mode setting operation results. After select the operation mode and auxiliary function status information of the air conditioner, if do not press the **OK** key, the selected information will not be sent to the air conditioner, and will not affect the current operation of the air conditioner.

The operations of remote controller locking and unlocking need no pressing of the **OK** key. The command information is sent directly after the **LOCK** key is pressed.

3) SET: In other display mode, press this key to enter the setting mode. By default, it is single setting, and the first in-service air conditioner is displayed. In setting operation mode, press

the key again, and the operation will be performed for all air conditioners in the network. Press it repeatedly to shift between single setting and global setting.

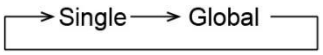

4) QUERY: Any time when pressing the key, the selected operation mode is to query the operation status of the air conditioner. By default, the first in-service air conditioner will be queried. Through the **ADD** and **REDUCE** keys, the parameter page can be changed to be queried. Through the ▲, ▼, ◀ and ▶ keys, the query status of other air conditioners can be changed.

5) ▲: In the query mode, every time when pressing the key, the operation status data of the air conditioner corresponding to the previous row of the matrix will be displayed. If it is currently in the first row, press the key, and the data of the air conditioner corresponding to the last row will be displayed. If this key was held down, the row will decrease one by one. In the setting mode, every time when press the key, if it is in the single operation mode, the air conditioner corresponding to the last row will be selected. If it is in the global operation mode, no effect will result after the key is pressed. In the main page, press the key to enter the query mode. By default, it is the first in-service air conditioner.

6) ▼: In the query mode, every time when pressing the key, the operation status data of the air conditioner corresponding to the next row of the matrix will be displayed. If it is currently in the last row, press the key, and the data of the air conditioner corresponding to the first row will be displayed. If this key was held down, the row will increase one by one. In the setting mode, every time when press the key, if it is in the single operation mode, the air conditioner corresponding to the last row will be selected. If it is in the global operation mode, no effect will result after the key is pressed. In the main page, press the key to enter the query mode. By default, it is the first in-service air conditioner.

7) ◀: In the query mode, every time when pressing the key, the operation status data of the previous air conditioner will be displayed. If it is currently on the first machine, press it again, and the data of the last machine will be displayed. If this key was held down, the address will decrease one by one. In the setting mode, every time when pressing the key, if it is in single operation mode, the air conditioner of previous in-service address number will be

selected. If it is in the global operation mode, no effect will result after the key is pressed. In the main page, press it to enter the query mode. By default, it is the first in-service air conditioner.

8) ▶: In the query mode, every time when pressing the key, the operation status data of the last air conditioner will be displayed. If it is currently on the last machine, press it again, and the data of the first machine will be displayed. If this key was held down, the address will increase one by one. In the setting mode, every time when pressing the key, if it is in single operation mode, the air conditioner of previous in-service address number will be selected. If it is in the global operation mode, no effect will result after the key is pressed. In the main page, press it to enter the query mode. By default, it is the first in-service air conditioner.

9) ADD: In the main page or the query mode, every time when pressing the key, the data of the current page will be displayed. If it is now in the last page, press the key again, and the first page will be displayed. In the setting mode, every time when pressing the key, if it is in the temperature regulation mode, the set temperature will decrease by 1°C (or 2°C) until the highest allowed set temperature. If it is in the timing startup/shutdown time setting mode, select the upper-level set time, if no time is set, 0.0 will be displayed, if hold down the key, the upper-level data will be selected consecutively. The specific change mode is as follows:

0.0→0.5→1.0→1.5→2.0→2.5→3.0→3.5→4.0→4.5→5.0→5.5→6.0→6.5→7.0

→7.5→ 8.0→8.5→9.0→9.5→10→11→12→13→14→15→16→17→18→19

→20→21→22→23→24

10) REDUCE: In the main page or the query mode, every time when pressing the key, the data of the current page will be displayed. If it is now in the first page, press the key again, and the last page will be displayed. In the setting mode, every time when pressing the key, if it is in the temperature regulation mode, the set temperature will decrease by 1°C (or 2°C) until the lowest allowed set temperature. If it is in the timing startup/shutdown time setting mode, select the upper-level set time, if no time is set, 0.0 will be displayed, if hold down the key, the upper-level data will be selected consecutively. The specific change mode is as follows:

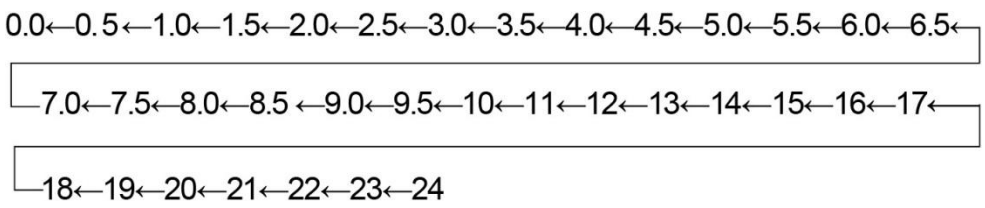

11) MODE: In setting operation mode, press this key to set the operation.

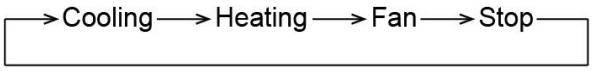

In other display mode, press this key to enter the setting mode. By default, it is single-machine setting, and the first in-service air conditioner is displayed.

12) FAN: In setting operation mode, press this key to set the fan of the indoor unit of the air conditioner to run in the following picture: (For rooftop packages, it is not available.)

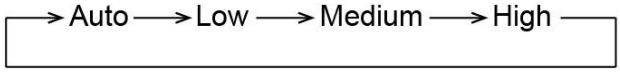

13) TIME ON/TIME OFF: In setting operation mode, press them to set the timing startup of air conditioner. Press them again to exit the timing setting, and restore the normal temperature regulation operation mode.

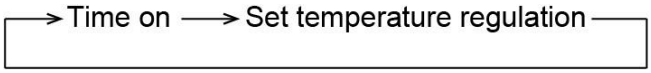

14) SWING: In the setting operation mode, press this key to enable or disable the swing function. If all currently selected air conditioner have no swing function, no effect will result after pressing the key. (For rooftop packages, it is not available.)

15) RESET: Anytime when the **RESET** key is pressed, the centralized controller will reset. The result is the same as the result of restoring power-on after power failure.

16) ON/OFF: Any time when pressing the key, the centralized startup/shutdown operation is performed for all current in-service air conditioners in the centralized controller network. If all in-service air conditioners in the network are in the power-off status, press the key to perform the startup operation. If it is in the mode setting page currently, and the parameters such as startup mode, temperature and air speed are selected, the air conditioner will be started according to the selected parameters. If no mode is selected currently, and the air conditioner is powered off or it is in other display page currently, and the default startup mode is: cooling, high speed fan air, set temperature 24°C, swing function enabled. The default startup mode is locked according to the system mode or judged according to other

constraint conditions. If any conflict exists, the next conflict-free mode will apply automatically. If conflict exists for all modes, startup will be impossible. If one or more in-service air conditioners in the network (including in the timing process of timing startup/shutdown), pressing this key will shut down all air conditioners. When performing the shutdown operation, the shutdown command is issued to the air conditioners in the startup status only, and is not issued to those in the shutdown status.

3.3 Display of the centralized controller

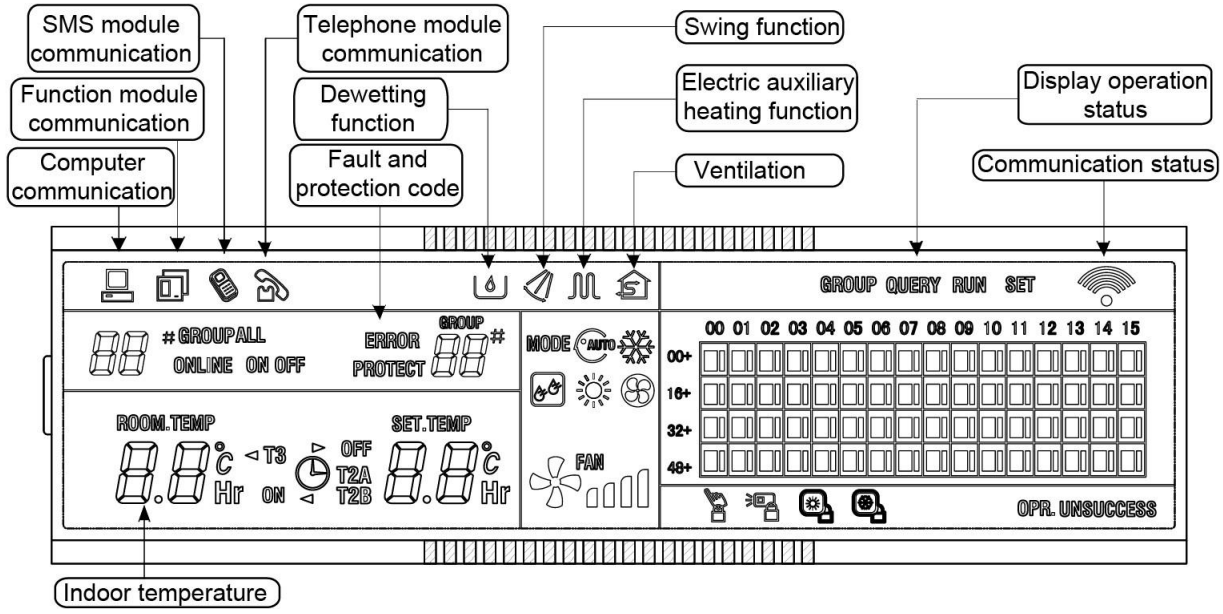

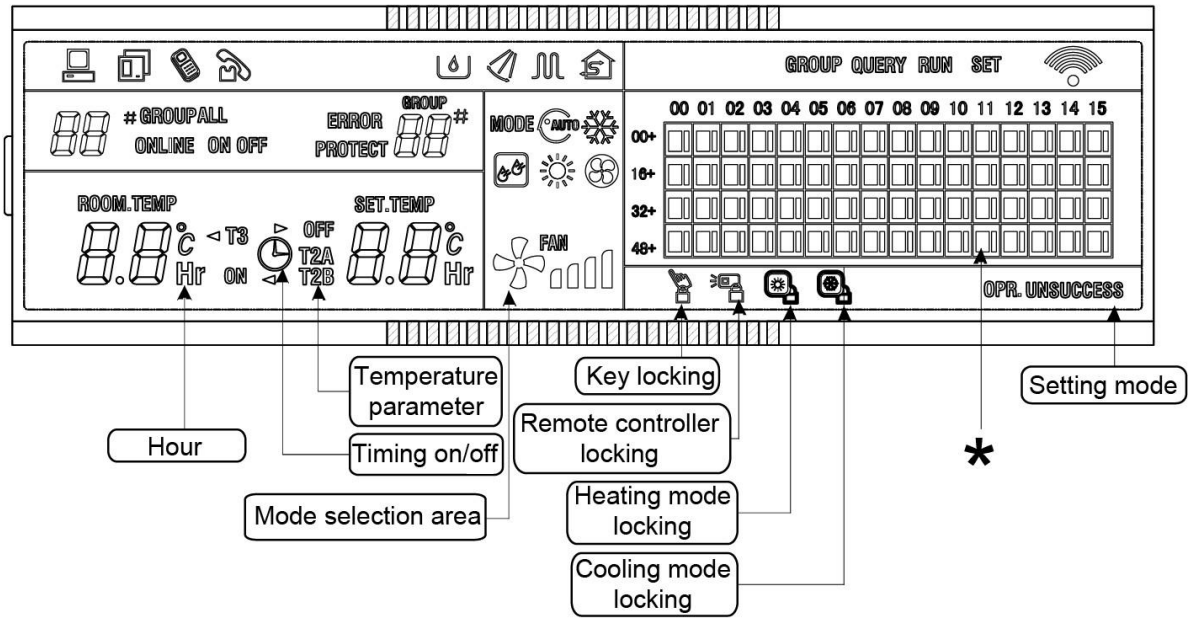

***:** The matrix is composed of 4×16 grids and each grid is composed of two blocks of different sizes. The matrix include horizontal coordinates 00-15 and vertical coordinates 00+, 16+, 32+ and 48+, which indicate the address of the indoor unit. The sum of the horizontal coordinate and vertical coordinate of the grid is the address of the grid. Each grid corresponds to an indoor unit of this address.

3.4 Operation instructions

1) System composition:

- ✓ The centralized controller is used to perform centralized control and data query for the network air conditioner. Each centralized controller can communicate with a maximum of 64 air conditioners to make up an air conditioner LAN, and implement centralized monitoring for the air conditioners in the network.
- ✓ The centralized controller can be interfaced with computer or gateway to implement centralized control and status query for all air conditioners in the network. It can be connected with WAN via computer or gateway to implement remote computerized control (with support of computer software). Each local computer or gateway can be connected to 16 centralized controllers as a maximum.
- ✓ The master or slave answer mode is implemented for communication between the centralized controller and the air conditioner, between the computer and the centralized controller. In the LAN composed of centralized controller and air conditioner, the centralized

controller is a master, and the air conditioner is a slave. In the LAN composed of computer and centralized controller, the computer or gateway is a master, and the centralized controller is a slave.

✓ The schematic diagram of network control system composition of air conditioner:

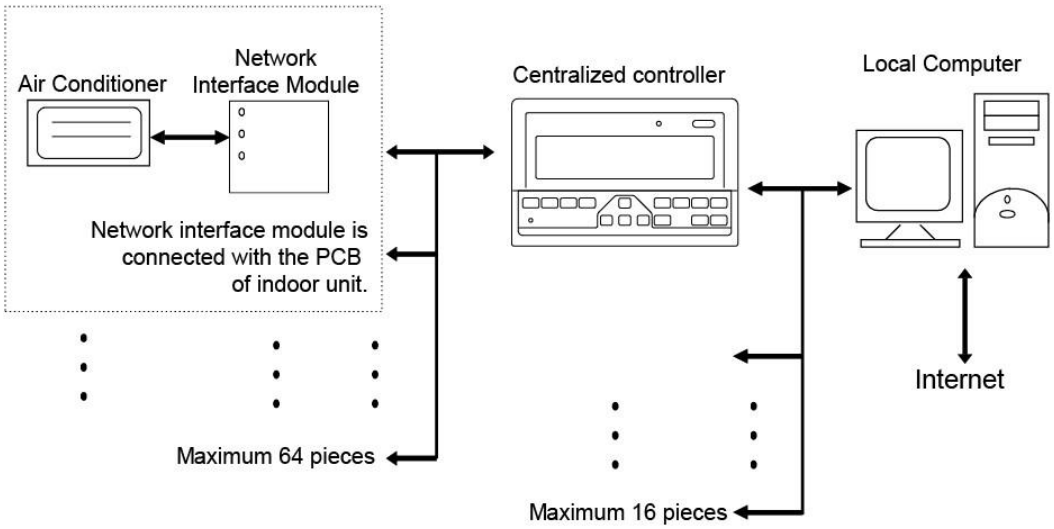

2) **Keywords and general function description:**

✓ Power on or reset:

When the centralized controller is powered on or reset, all display segments of the LCD are luminous for 2 seconds and then goes off. 1 second later, the system enters the normal display status. The centralized controller is in the main page display status and displays the first page, and searches the in-service air conditioners in the network. Once the search is finished, the centralized controller enters the mode setting page, and sets the first in-service air conditioner by default.

✓ Network area address of centralized controller:

The local computer or gateway can be connected with 16 centralized controllers for communication. Each centralized controller serves as an area of the air conditioner network. The centralized controllers are differentiated by bit selection address. The configurable range is 0~15.

✓ State indication:

If any local keypad operation is setting the operation status of the air conditioner, the indicator is on when the signals are sent. Upon completion of the setting process, the

indicator goes off. If an in-service air conditioner in the network is faulty, or the centralized controller network itself is faulty, the indicator will blink at 2Hz.

If one or more in-service air conditioners in the network are running, including under setting of timing start or shutdown, the indicator will be luminous. Otherwise, the indicator is off.

- ✓ Locking of centralized controller:

  After receiving the centralized controller locking command sent from the computer, the centralized controller disables the startup or shutdown and setting or the air conditioner, and sends commands to lock remote controllers of all air conditioners in the network of the centralized controller. After receiving the unlocking command, the centralized controller enables the startup or shutdown operation, and sends commands to unlock the remote controller of all air conditioners.

  The locking status of the remote controller can be locked or unlocked by the computer or centralized controller separately. The locking status of the centralized controller is memorized after power failure of the centralized controller, and will not vanish after the power supply is restored, unless the command of unlocking is received.

- ✓ Mode locking function:

  After the mode locking command is received, the command is forwarded to the air conditioner, and the centralized controller displays the mode locking flag. After the command of unlocking is received, the non-conflict mode can be selected freely. The centralized controller can also lock modes of all indoor units.

- ✓ Emergent shutdown and compulsory startup:

  If the emergent switch of the centralized controller was switch off, all air conditioners in the network of the centralized controller will be shut down compulsorily. The centralized controller and computer and all functional modules are disabled from startup and shutdown until the foregoing switch is turned off. If the switch was turned on, all air conditioners in the network of the centralized controller will be start up compulsorily. By default, they will run in the cooling mode. The startup and shut-down operations of the centralized controller and the computer and all functional modules will be disabled (Only the command of startup is sent to the air conditioner, without affecting operation of the remote controller after startup)

until the foregoing switch is turned off. If the foregoing two switches are turned on concurrently, the emergent shutdown switch shall have preference.

3.5 General display data entries

1) General display data is displayed in all display pages.

- ✓ Under the interconnected control of the computer or gateway, the data is displayed in graphic (). Otherwise, no data is displayed.
- ✓ If the centralized controller is connected with the functional module for communication, the data is displayed in graphics (). Otherwise, no data is displayed.
- ✓ If the centralized controller is connected with the SMS remote control module for communication, the data is displayed in graphics (). Otherwise, no data is displayed.
- ✓ If the centralized controller is connected with the telephone remote control module for communication, the data is displayed in graphics (). Otherwise, no data is displayed.
- ✓ In normal operation of the centralized controller, the periodical cycle module communicates with the network interface module, and the data is displayed dynamically and cyclically: (blank), ○ , , .
- ✓ In the centralized control locked status or the keypad locked status, the locking flag () is displayed. After unlocking, it is not displayed. In the centralized controller locked status or the keypad locked status, the locking flag is displayed constantly. If both of them are locked concurrently, the locking flag is displayed constantly.
- ✓ In the setting page, if the selected air conditioner is in the remote controller locked status (in case of non-single machine operation, as long as one machine is in the remote controller locked status, it is deemed the locked status), the flag () is displayed constantly.
- ✓ If all indoor units lock the cooling mode, this flag () will display, and if all indoor units lock the heating mode, the flag () will display.

2) Data display handling

- ✓ Indoor unit code (address) display: display range: 00~63, and with # being luminous concurrently.

- ✓ Indoor temperature display: display range: 00~99°C. The indoor temperature is displayed concurrently. If the temperature is higher than 99°C, 99°C will be displayed. If the temperature value is invalid, '--' will be displayed.
- ✓ If timing startup or shutdown is set, the flag ( ) is displayed.
- ✓ T3, T2A and T2B display: in the single-machine query page, display can shift between T3, T2A and T2B; by the way, the temperature value is displayed concurrently, with the corresponding °C being luminous.
- ✓ In case of air conditioner fault or protection, the corresponding fault code or protection, the corresponding fault code or protection code can be displayed.
- ✓ Liquid crystal matrix display description:

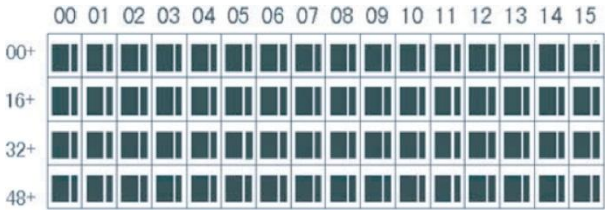

The liquid crystal matrix is composed of 4×16 grids, and each grid is composed of two blocks of different sizes. The matrix includes horizontal coordinates 00~15 on the upper side and vertical coordinates 00+, 16+, 32+ and 48+ on the left side, which indicate the address of the indoor unit. The sum of the horizontal coordinate and the vertical coordinate of the grid is the address of the grid. Each grid corresponds to an indoor unit of this address. One grid is composed of two blocks of different sizes. The status indication table is as follows;

	Constantly on	Slow blink		Fast blink
Big black block	In-service	Selected		Out of service
Small black block	Power on		Fault of indoor or outdoor unit	Power off

3) LCD display description

✓ Description of the standby page

The LCD displays the standby page, 60 air conditioners are in service, of which 28 are powered on and 32 off.

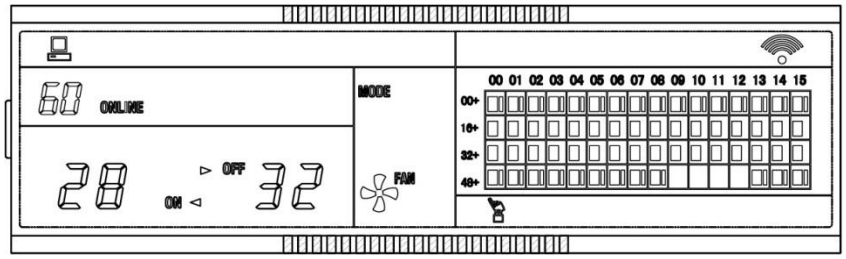

In the matrix, the bid dots from (00, 16+) to (15, 32+) are luminous, and the small dots are not luminous. It indicates the 32 air conditioners with the addresses from 16 to 47 are powered off.

In the matrix, the big and small dots from (09, 48+) to (12, 48+) are not luminous. It indicates the four air conditioners with the address from 57 to 60 are outside the network.

All other big and small dots in the matrix are luminous. It indicates all other air conditioners are in the network and powered on.

The address of the air conditioner is sum of the coordinates. For example, the address of (09, 48+) is 09+48=57.

The centralized controller keypad is locked, and the centralized controller communicates with the computer normally.

✓ Description of the query page

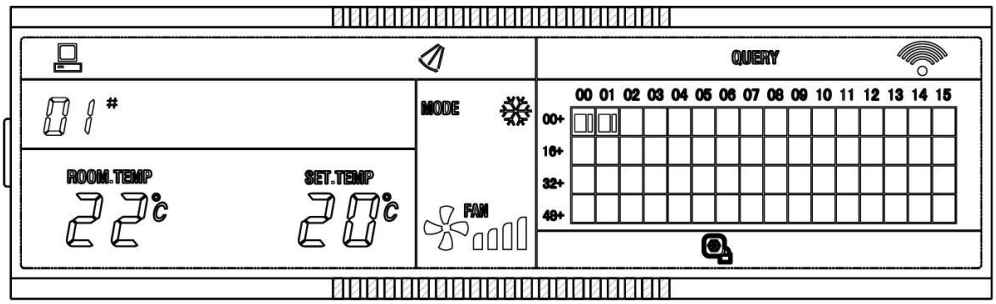

The LCD displays the query page, and the air conditioner with the address of 08 is being queried. Mode of the air conditioner with the address 01 is cooling, high speed air

supply, swing on, indoor temperature 22°C, setting temperature 20°C and cooling mode locked.

In the matrix, only the big and small black dots at (00, 00+) and (01, 00+) are luminous. It indicates the in-service and power-on status of the air conditioners with the addresses of 00 and 01.

The centralized controller communicates with the computer normally.

✓ Description of the setting page

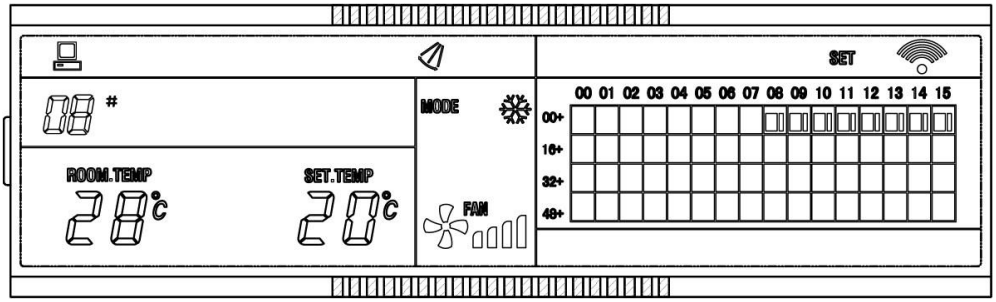

The LCD displays the setting page, and queries the air conditioner with the address of 08. The mode of the air conditioner with the address 08 is: cooling, high speed air supply, swing on, indoor temperature 28°C, setting temperature 22°C and cooling.

In the matrix, only the big black dots from (08, 00+) to (15, 00+) are luminous. It indicates the air conditioners with the addresses from 08 to 15 are in service.

The centralized controller communicates with the computer normally.

✓ Fault page display description

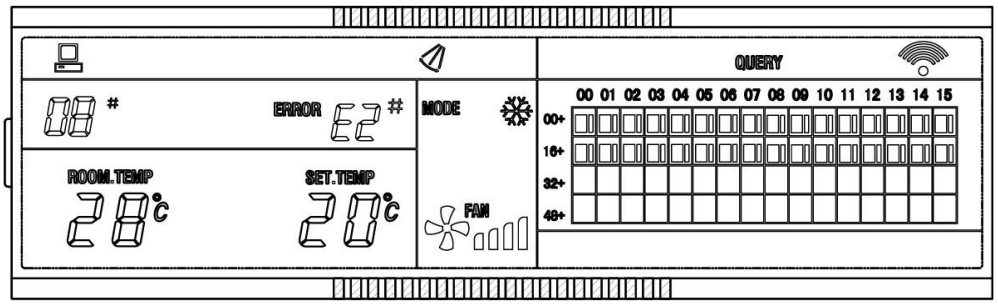

Query the air conditioner with the address of 08 in the query page. The air conditioner with the address of 08 is faulty, and the fault code is E2. The big black dot below (08, 00+) blinks.

In the matrix, only the big and small black dots from (00, 00+) to (15, 16+) illuminate. It indicates the in-service status of the air conditioners with the addresses from 00 to 31.

The centralized controller communicates with the computer normally.

Fault code table:

Fault code	Fault content
EF	Other faults
ED	Outdoor unit fault protection
EA	Over-current of compressor (4 times)
E9	Fault of communication between main board and display board
E7	EEPROM error
E6	Zero crossing detection error
E5	T3 or T4 temperature sensor fault
E4	T2B sensor fault
E3	T2A sensor fault
E2	T1 sensor fault
E1	Communication fault
E0	Phase order error or phase loss

Protection code table:

Fault code	Fault content
PF	Other protection
P8	Over-current of compressor
P6	Discharge low pressure protection
P5	Discharge high pressure protection
P4	Discharge pipe temperature protection
P2	Condenser hi-temperature protection
P1	Anti-cool air or defrost protection (Only for heat pump units)
P0	Evaporator temperature protection

3.6 Installation

The wireless remote controller is the standard controller for split series air conditioner. Wired controller as optional controller can directly be connected with the display board of the indoor

units. Centralized controller should be connected with the main PCB board of the indoor unit through network interface module, which is named as MD-NIM01.



1) The installation of network interface module

Outlook of MD-NIM01

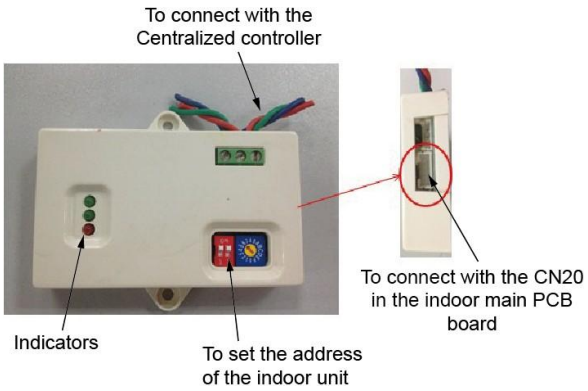

The first green lighter: Ready indicator. When the module and controller is connected rightly, the lighter will be on; otherwise, it will be off. If the unit is in the status of locking remote controller and locking mode, the lighter will flash.

The second green lighter: Communication indicator. When there is any signal between the network interface module and centralized controller, the indicator will be on.

The third lighter: Alarm indicator. If there is any error between the module and controller for communication, it will be on.

Dimension of MD-N1M01

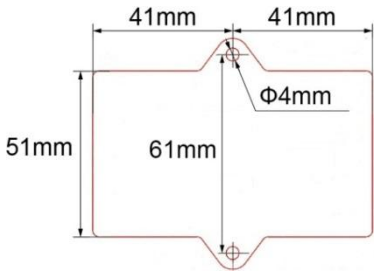

Connect the network interface module with the port CN22 in the main PCB board of indoor unit through the signal wire, which is as the attachment of the module.

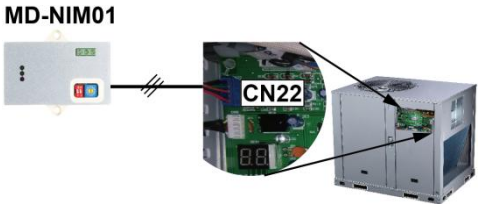

Fix the network interface module on the wall near the indoor unit. And set the different address of the indoor unit.

2) The installation of centralized controller

Open the front panel of the centralized controller by screwdriver as the following picture: (Unit: mm)

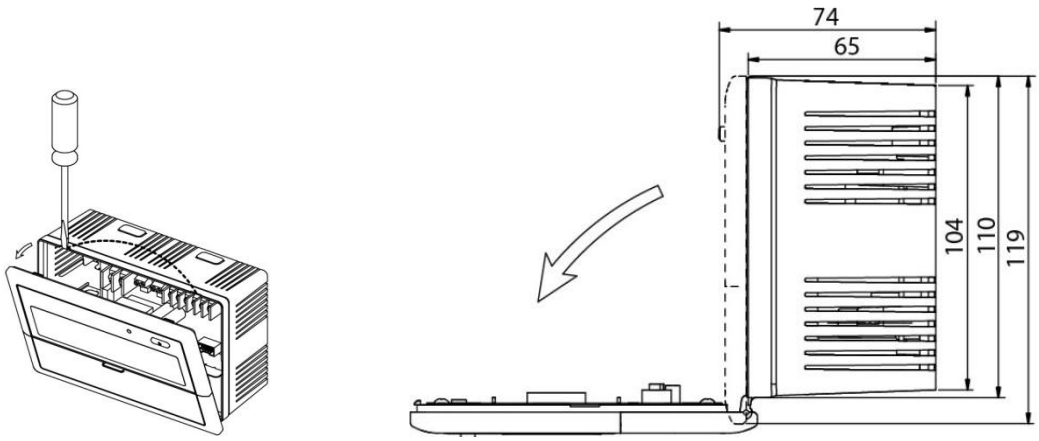

According to size of the hole in controller body, fix the controller on the place as needed. (Unit: mm)

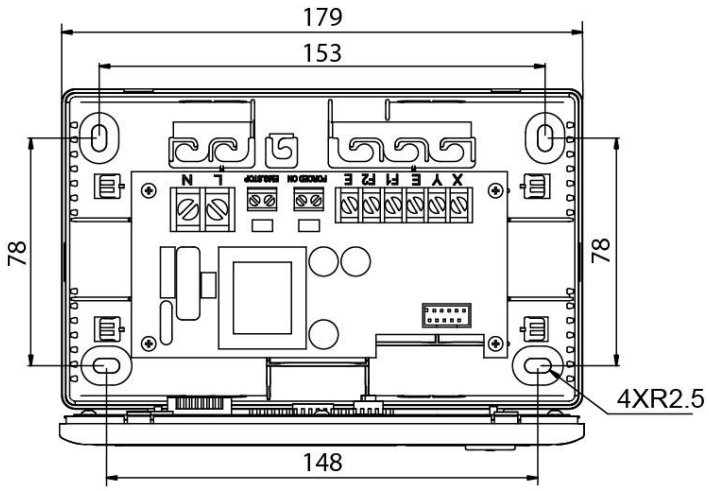

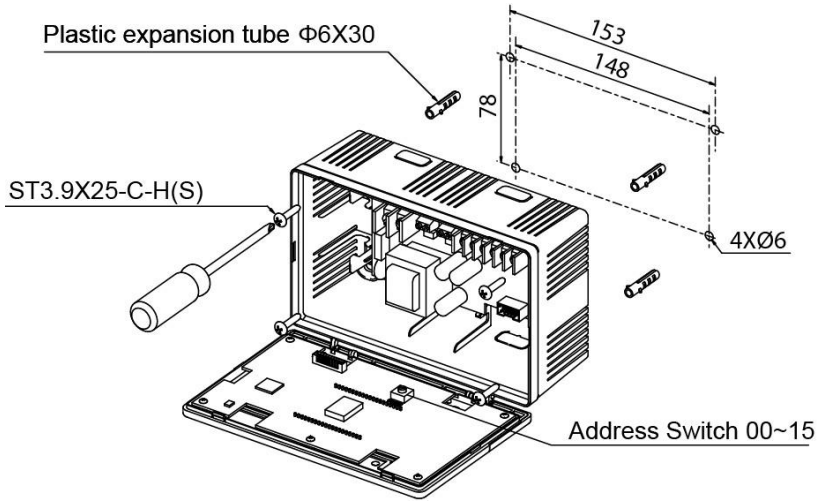

3) The wire connection

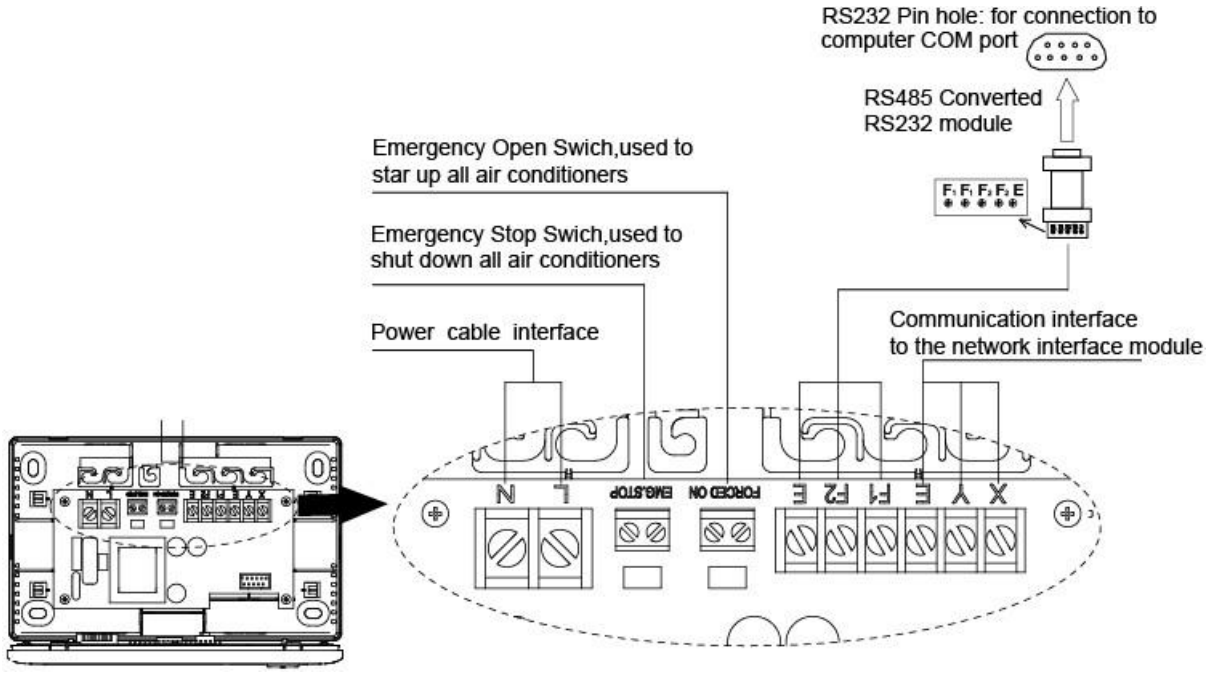

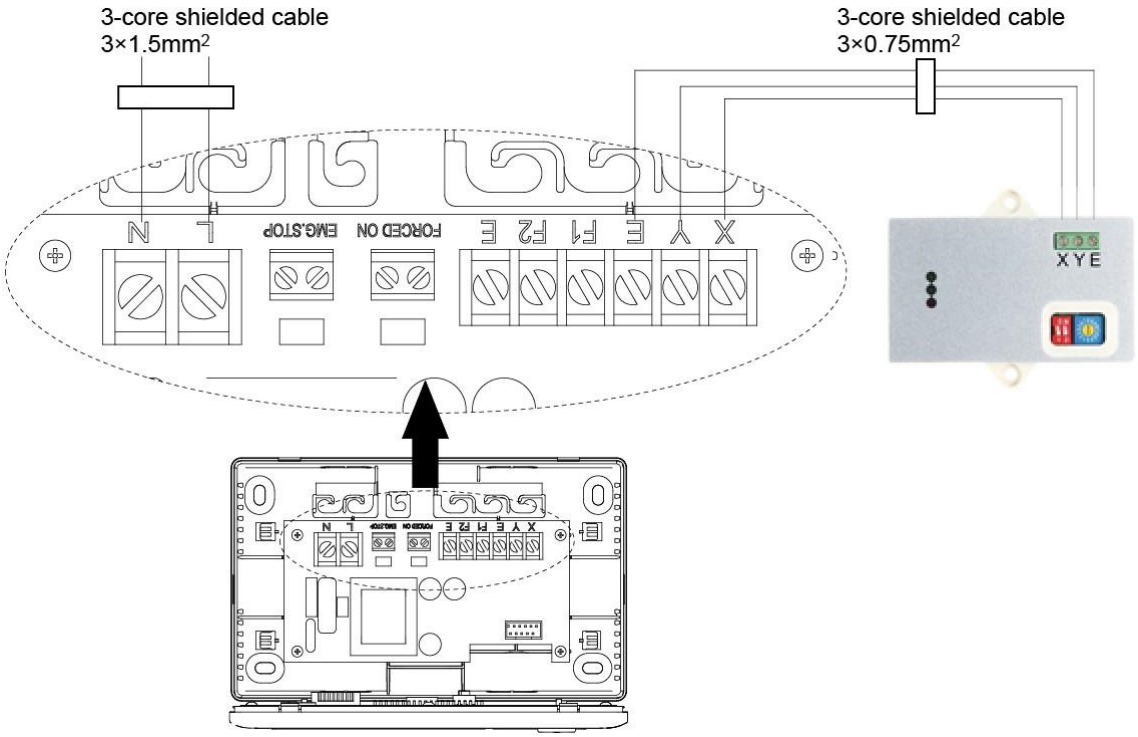

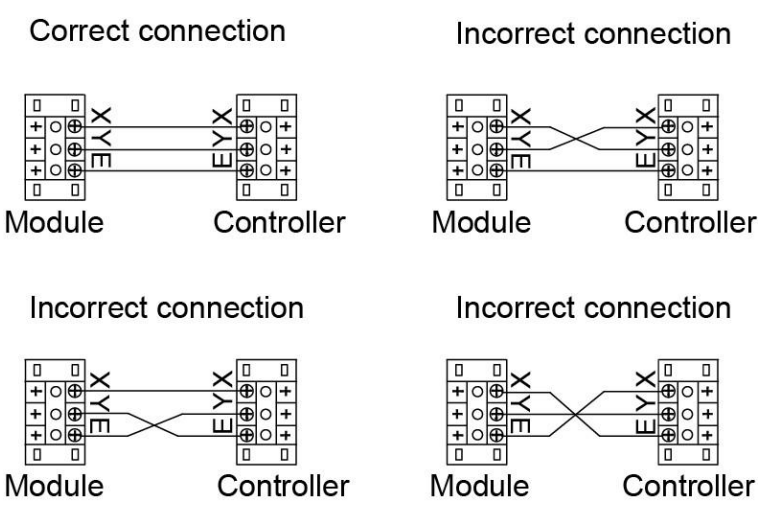

4) System wiring instruction

✓ Wiring diagram of building network air conditioning system

Wiring diagram with good communication effect

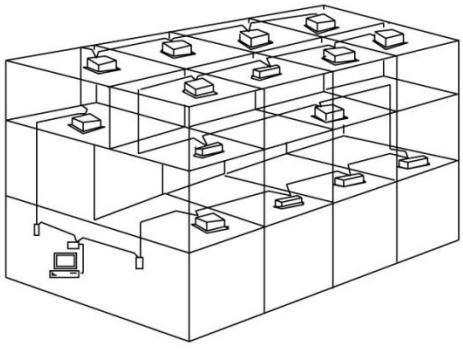

Wiring diagram with poor communication effect (not recommended because it may lead to poor communication

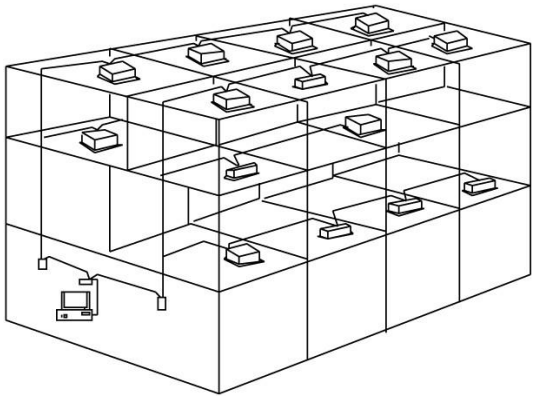

✓ System wiring diagram of centralized monitoring and indoor unit of air conditioner

Both of the following wiring modes of centralized monitor and indoor unit are applicable: (Quantity of indoor units connected with each centralized monitor is less than or equal to 64).

